IMI TA

TA-PICL

Prefabricated units

Pressure independent control loop

Engineering GREAT Solutions

IMI Hydronic Engineering

TA-PICL

TA-PICL is a 2-way control circuit for temperature control. TA-PICL is pressure independent on the primary side and suitable in ventilation heat exchangers, radiator systems, floor heating systems etc.

Key features

> **Pressure independent control**
Stabilized differential pressure on the primary side ensures accurate control and independent balancing.

> **Easy balancing and good compatibility**
Secondary circuit return pipe is provided with IMI TA balancing valve.

Technical description

Applications:
TA-PICL is made for control circuits with variable flow in primary circuit and constant flow in secondary circuit.

Pressure class:
All components in the product are classified to at least PN 6.

Temperature:
Max media temperature: 120°C
Min media temperature: -20°C
These temperature limitations are for TA-PICL. Also check the limitations of the chosen circulation pump.

Union dimension:
DN 15-25. Couplings G40 for circulation pump DN 25 are included.

Shut-off valves:
STS

Balancing valve:
STAD

Control valve:
TBV-CMP

Thermometers:
Graduated 0–120°C for heating, -40 – +40°C for cooling.

Insulation:
Heating: Non-combustible mineral wool
Cooling: Armaflex condensate insulation

Protective box:
Plastic laminated sheet metal.

Mechanical construction

General:
TA-PICL is produced in sizes from DN 15 to DN 25. TA-PICL is connected by means of pipe threads.

Balancing:
The secondary circuit's return pipe is provided with balancing valve, STAD. The valve has measuring points and also functions as shut-off valve.
The primary circuit is provided with pressure independent control valve, TBV-CMP with measuring points. TBV-CMP can be shut-off for maintenance.
When balancing or checking flow, please use the balancing instrument TA-SCOPE or refer to separate catalogue leaflet for STAD and TBV-CMP.

Shut-off:
The inlets in both circuits are provieded with the shut-off valve STS with measuring point.
The return pipe in the primary circuit is provided with TBV-CMP with shut-off function.
The return pipe in the secondary circuit is provided with STAD with shut-off cunction.

Measuring points:
All valves included in the control circuit are provided with measuring points, to permit measurement of available pressure, pressure drop, flow and energy in connected circuits.

Pump:
TA-PICL is prepared for pump installation DN 25. Two premounted pump connections are included.

Insulation – box:
TA-PICL is insulated as standard with non-flammable mineral wool for heating systems and with Armaflex condensation insulation for cooling systems.
External valves and couplings are not insulated.
The product has a protective box of plastic laminated sheet metal, which is easy to dismantle for inspection

Mounting:
TA-PICL is reversible. A bracket for wall mounting is included as standard. A floor mounting stand is available as an option.

Type plate:
A self-adhesive type plate is fixed on both sides of the box. The type plate includes the following:
- Pos specifies the section of the installation which the control circuit serves
- Type gives the characteristic data of the product
- Year of manufacture

Document:
Mounting and operating instruction is included.

Thermometers:
4 thermometers are installed on each unit. The thermometers for heating are graduated 0-120°C. The thermometers for cooling are graduated -40° - +40°C.

Actuators:
Specified when ordering.
- EMO TM, 24 V proportional actuator
- EMO 3, 24 V three-point actuator
- EMO 3, 230 V three-point actuator

See separate catalogue leaflets.

Dimension sketch

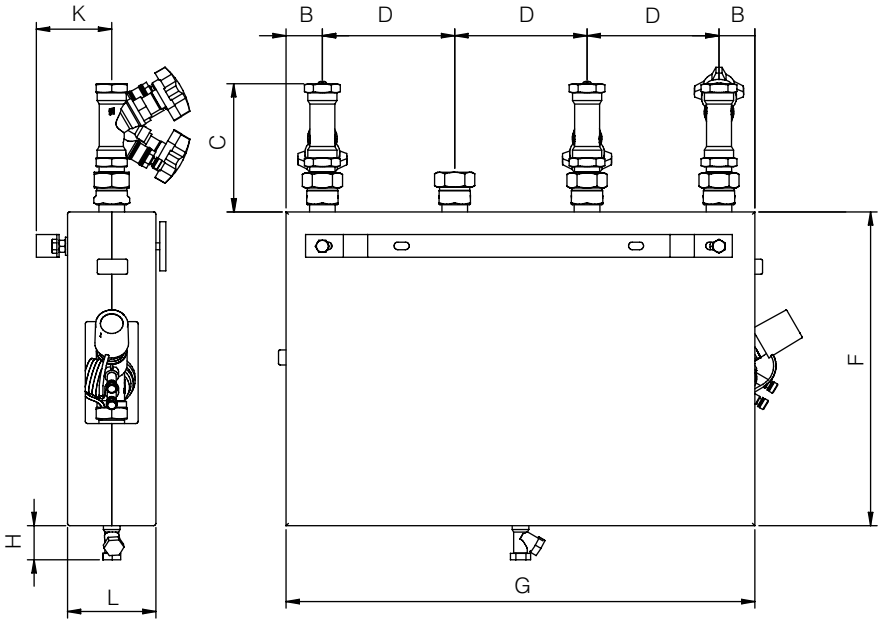

DN	B	C	D	F	G	H	K	L	Weight* kg
15	47,5	132	125	310	455	50	75	100	8,5
20	37,5	150	125	315	435	55	75	105	9,7
25	55	175	175	415	620	50	80	110	15,3

*) Excl pump

Correction factors

The flow calculations are valid for water (+20°C). For other liquids with approximately the same viscosity as water (≤20 cSt = 3°E=100S.U.), it is only necessary to compensate for the specific density. However, at low temperatures, the viscosity increases and laminar flow may occur in the valves. This causes a flow deviation that increases with small valves, low settings and low differential pressures. Correction for this deviation can be made with the software TA Select or directly in our balancing instruments.

Installation

Application example:
TBV-CMP + EMO TM

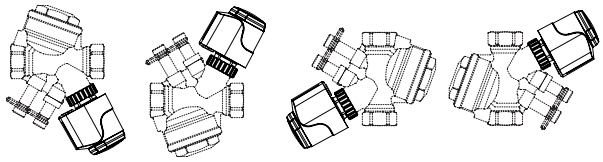

EMO TM	IP54	IP54	IP54	IP54
EMO 3	IP43			

Fundamental design

Variable flow in primary circuit and constant flow in secondary circuit
For installations connected to district heating networks or other installations where low return temperature is required. The flow in the secondary circuit can be greater than or equal to the flow in the primary circuit.

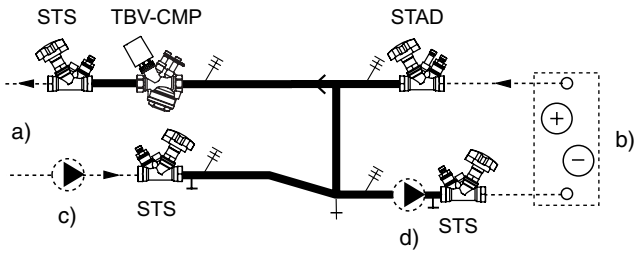

a) Boiler or heat exchanges
b) Heating group or air heater/cooler
c) Main pump - primary
d) Pump - secondary

Sizing

Sizing example (600 l/h primary and secondary):
1. Choose size of TA-PICL in the diagram called "Primary side". Each dimensioning field also contains pre-setting values for the pressure independent control valve TBV-CMP. Strive for as high pre-setting value as possible.
In this case: TA-PICL DN 20, setting 8,5.
2. Check that the available differential pressure ΔH is higher than, or equal to ΔH_{min} for the chosen dimension and pre-setting of TBV-CMP. See tables below.
3. Use the diagram "Secondary side" for sizing of the circulation pump on the secondary side.
In this case 600 l/h requires a pressure drop of 2,3 kPa. Add 2,3 to the pressure drop in the secondary circuit to calculate the smallest needed pump head.
4. The chosen product is TA-PICL DN 20.

Primary side

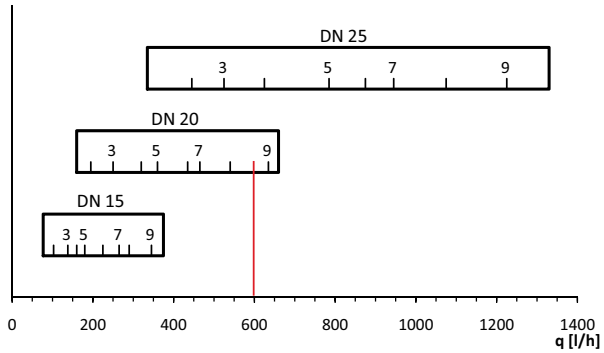

DN 15

Position	1	2	3	4	5	6	7	8	9	10
q_{max}	77	103	138	160	180	225	265	290	345	375
ΔH_{min}	15	15	15	16	16	17	17	18	18	20

DN 20

Position	1	2	3	4	5	6	7	8	9	10
q_{max}	160	195	250	320	360	435	465	540	635	660
ΔH_{min}	15	15	15	16	16	17	17	17	18	19

DN 25

Position	1	2	3	4	5	6	7	8	9	10
q_{max}	335	445	525	625	785	875	945	1075	1225	1330
ΔH_{min}	15	15	15	16	16	17	17	18	19	21

q_{max} = l/h at each setting and fully open valve plug.
ΔH_{min} = minimum needed differential pressure over the TA-PICL's primary side.

Secondary side

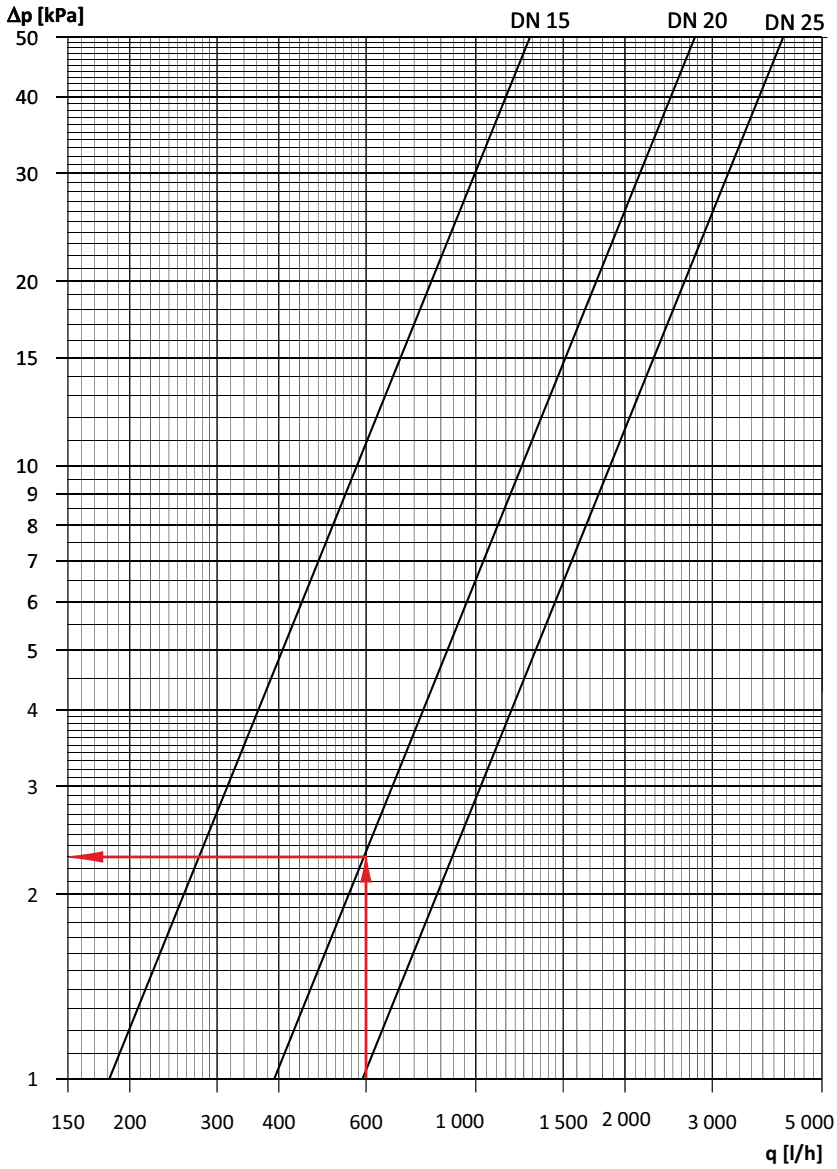

Articles

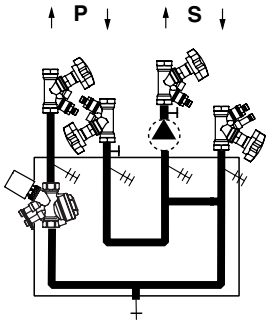

Heating

DN	EAN	Article No
15	7318793997708	54 194-015
20	7318793997807	54 194-020
25	7318793997906	54 194-025

Cooling

DN	EAN	Article No
15	7318793998002	54 194-115
20	7318793998101	54 194-120
25	7318793998200	54 194-125

P = Primary side
S = Secondary side

9-5-10 EN TA-PICL 09.2014

300 709-01
2011.12

TA-PICL

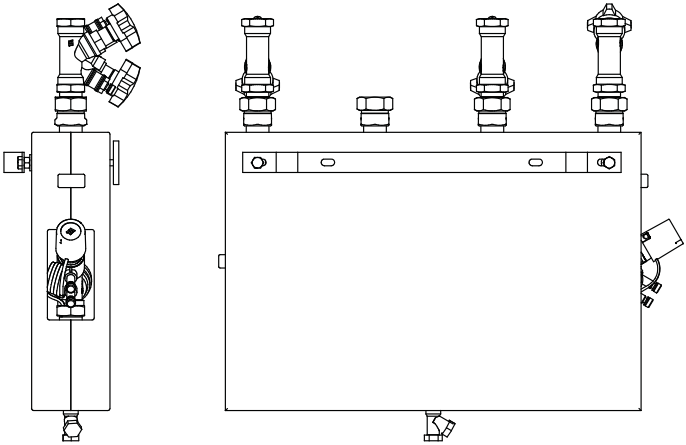

Turning the unit / Drehen der Einheit / Vändning av enhet

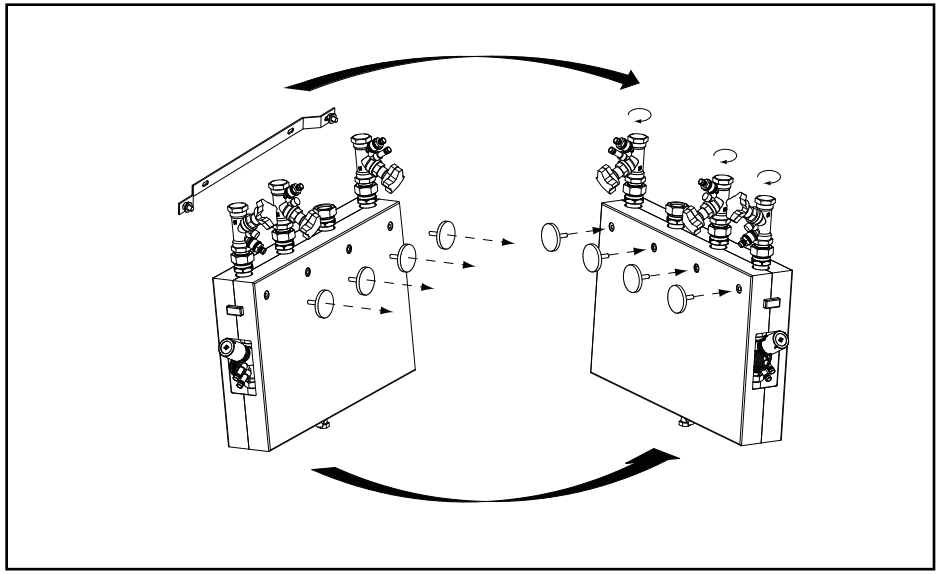

Balancing primary side / Einregulierung Primärseite / Injustering primärsida

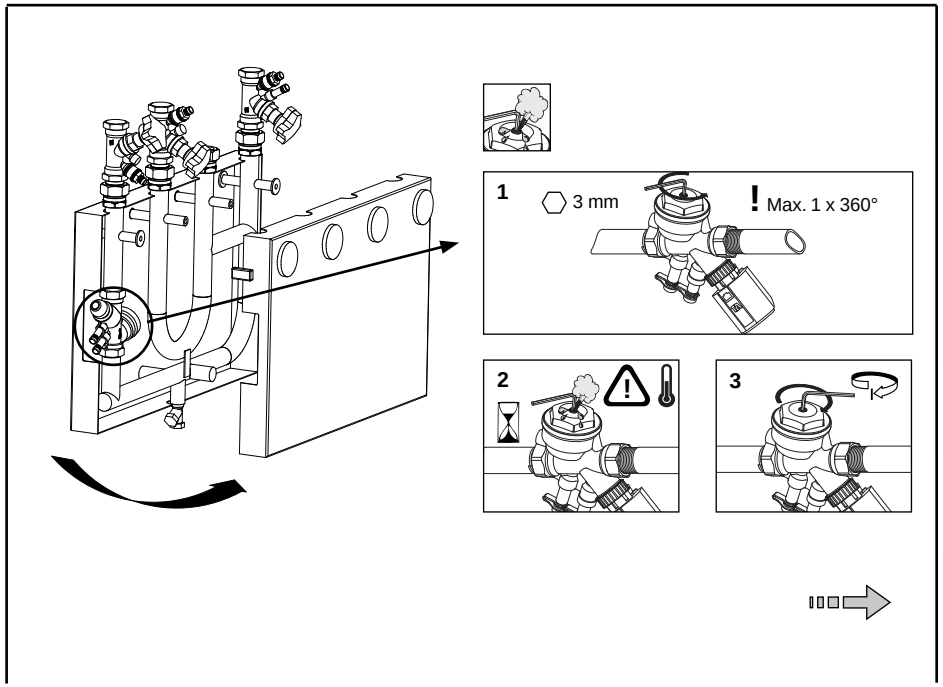

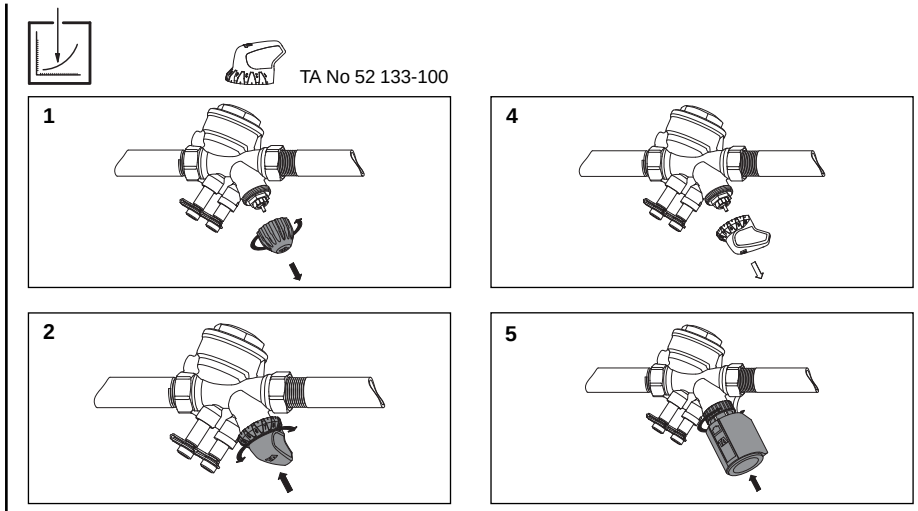

Pos	q_{max} TBV-CMP NF DN 15	TBV-CMP NF DN 20	TBV-CMP NF DN 25
1	77	160	335
2	103	195	445
3	138	250	525
4	160	320	625
5	180	360	785
6	225	435	875
7	265	465	945
8	290	540	1075
9	345	635	1225
10	375	660	1330

Balancing secondary side / Einregulierung Sekundärseite / Injustering sekundärsida

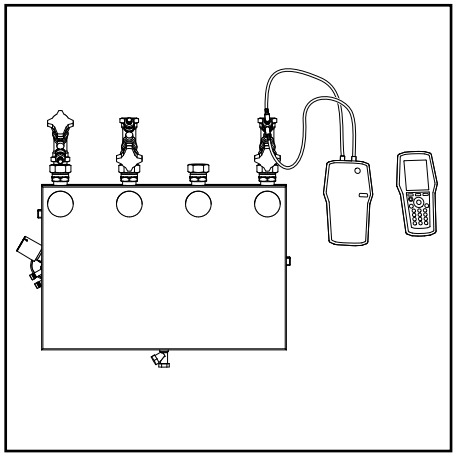

Measure power / Leistungsmessung / Effektmätning

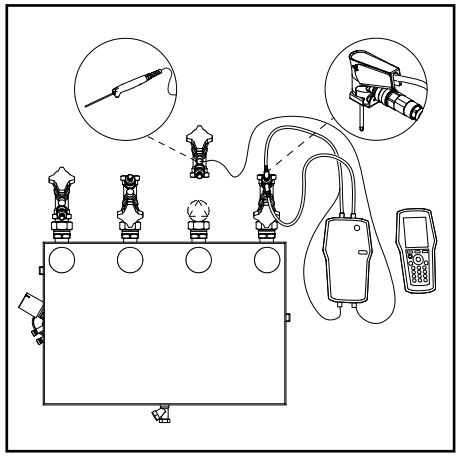

Draining / Entleerung / Avtappning

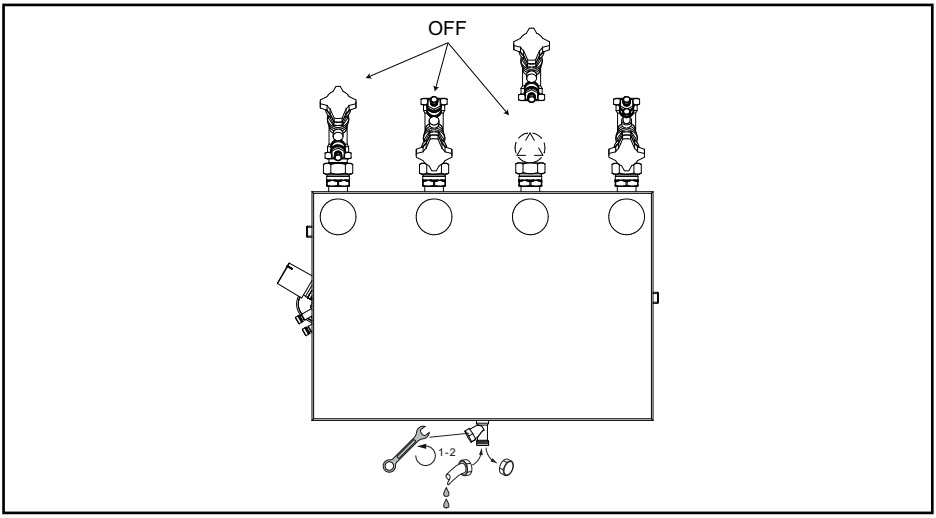

Flushing / Spülen /Spolning