IMI TA

TA-COMFORT-W

Prefabricated units

Heating interface unit for hot water services

Engineering GREAT Solutions

IMI Hydronic Engineering

TA-COMFORT-W

All in one design with thermostatic mixing valve and/or temperature maintaining bypass with IMI Heimeier RTL valves.

Key features

> **Complete systems for decentralised hot water distribution**
Producing hot water via the heat exchanger.

> **Considerable savings in installation costs**
Central risers and decentralised distribution. Domestic hot water flow and return pipes are no longer required.

> **Lower maintenance costs**
No additional costs for consumption settlement, each unit is recorded separately.

Technical description

Applications:
Supply of hot water to apartments in multiple-dwelling buildings, hotels, hospitals and elderly homes with actual consumption accounting.

Dimensions:
Draw-off volume 12, 15 and 17 l/min when heating hot water.
Normal conditions with:
Heating supply pipe: 65°C
Cold water inlet: 10°C
Hot water outlet: 50°C
Cold water pressure: min. 2 bar

Pressure class:
PN 10

Temperature:
Max. working temperature: 110° C

Material:
Heat exchanger: High-grade steel AISI 316
PM regulator: DZR brass, DVGW and ACS approved
Differential pressure controller STAP: AMETAL®
Control valve TBV-C: AMETAL®
Piping material: High-grade steel corrugated piping AISI 316, insulated
Housing: Galvanized sheet steel

General:
More information on RTL – see separate technical leaflet.

Function

Heating interface unit with hot-water generation based on flow principle for local and district heating networks, without the need for additional external energy input. Fully adjustable temperature bypass thermostatically controlled.

Using a centralised heat source such as a traditional boiler system or district heating network the unit is supplied with a flow of low temperature hot water (normally up to 90°C) or medium temperature hot water (normally 90-110°C). The unit is also connected to the cold water services supply. The hot water service is then generated from the integrated plate heat exchanger.

The supply differential pressure should be kept constant using a STAP differential pressure controller at the main inlet. The exact set point of the differential pressure controller will depend on the system pressure loss calculation.
The proportional flow controller only allows the domestic hot water and heating water to flow over the plate heat exchangers while hot water is being drawn off. When the draw-off ends, the valve closes to stop heat transfer through the plate heat exchanger.

TA-COMFORT is an all-inclusive product in which all of the system components are technically configured to best optimize the performance.

Scope of delivery

- Baseplate with 4 x 3/4” connections (TA-COMFORT-WDM heating connection 2 x 1”)
- High-grade steel plate heat exchanger
- PM regulator with lime scale preventive coating, DVGW and ACS approvals
- Hot water flow limiter 12, 15 or 17 l/min
- Thermal circulation bridge (holding bypass), IMI Heimeier RTL
- 1 strainer
- Dummy piece for water meter installation.
- Piping made of flexible, high-grade steel, insulated, packed flat, finish-piped, all components fully installed and pressure tested

Hydronic design of the station

TA-COMFORT-WS

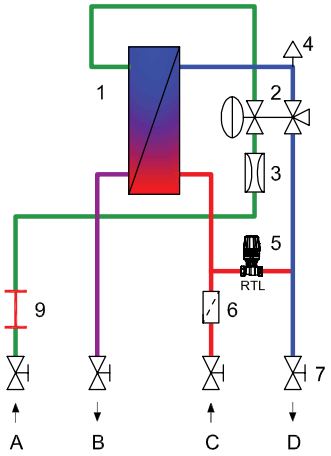

TA-COMFORT-WSM

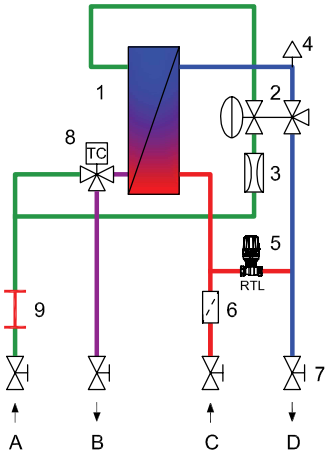

TA-COMFORT-WDM

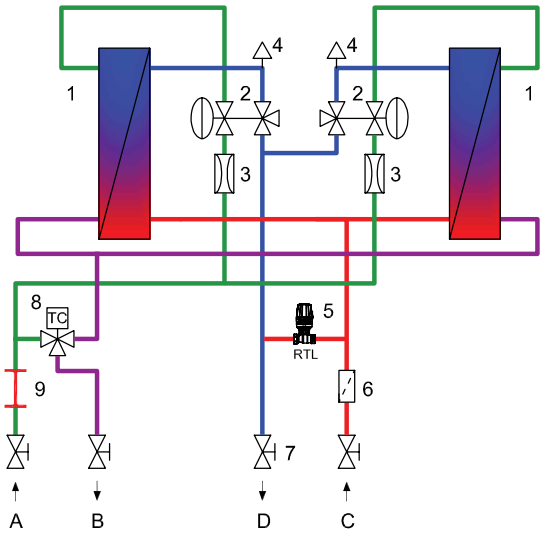

A. Cold water inlet
B. Hot water outlet
C. Heating supply
D. Heating return

1. Stainless steel plate heat exchanger
2. PM Controller: Control of heating water during tap water consumption with anti calcium coating, DVGW and ACS approvals.
3. Hot water flow limiter 12, 15 or 17 l/min
4. Air vent
5. RTL Thermal circulation bypass
6. Strainer
7. Shut-off 3/4” female (optional)
8. Scald protection (thermostatic hot water mixing valve) (optional)
9. Dummy piece for cold water meter

Application examples

Hydronic system connection

The sizing of the supply pipes from the main supply to the station has to be done in relation to the maximum demand for the domestic hot water.

The sizing of the main supply pipes should be done with an appropriate diversity factor in relation to the amount of connected stations. Calculation software is available to assist with this. Please contact your IMI Hydronic Engineering representative.

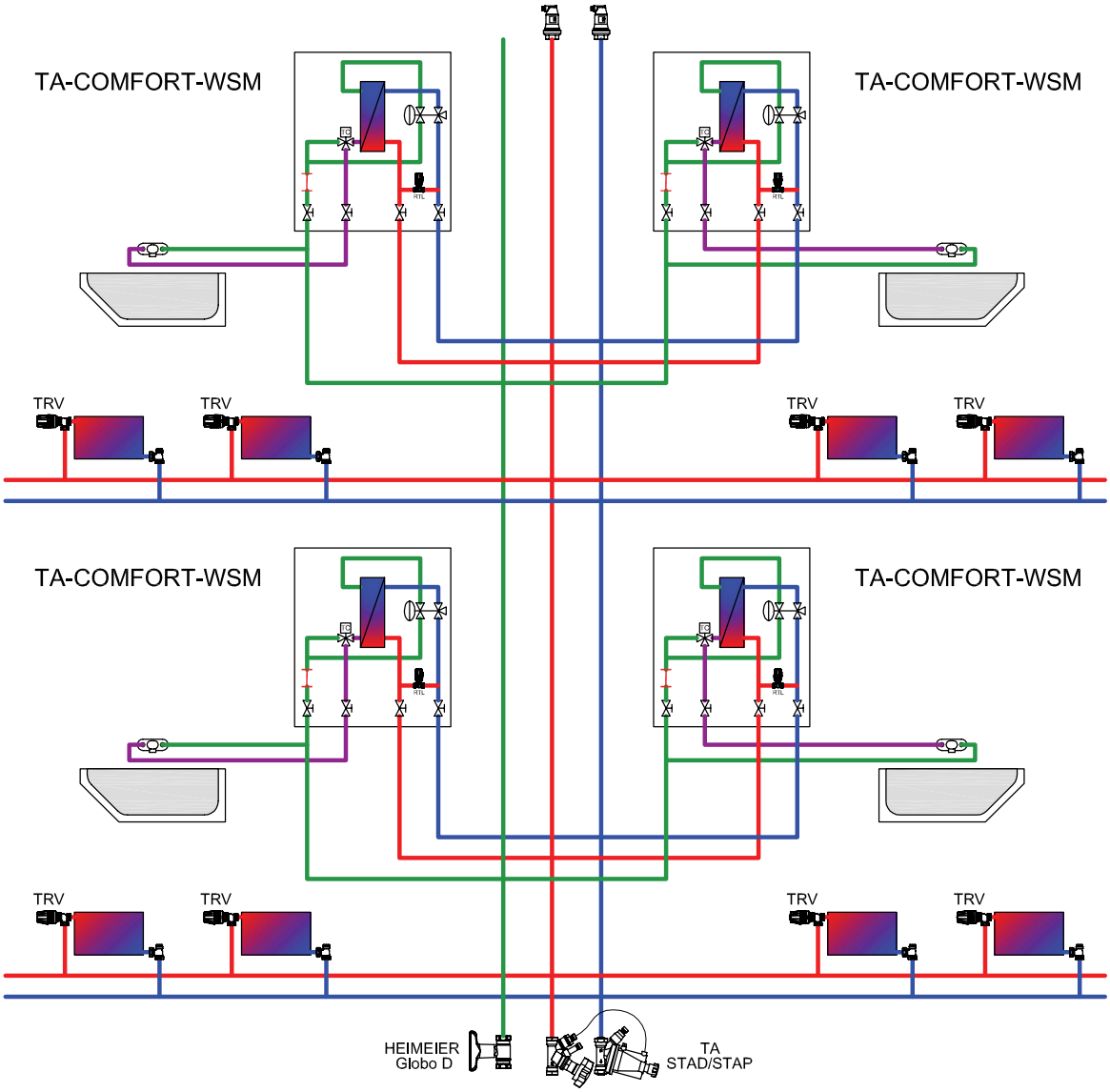

ATTENTION

If the supply pipes are undersized it may not be possible for the TA-COMFORT to produce the required amount of hot tap water. This has to be taken in consideration especially when plastic or cross link poly-ethylene piping systems are used. The reduced diameter of these piping systems can cause increases in system resistance. This should be taken into account when sizing the system.

A Δp controller STAP on the bottom of the riser enables a constant differential pressure for the stations. The pressure drop in the connection pipes after the Δp controller must not exceed 10 kPa. The set point can be adjusted from 10 - 60 kPa.

Diagrams – TA-COMFORT 35 kW

Hot tap water flow

Required flow of heating water to increase the tap water by 40 K (10°C to 50°C) in relation to the supply temperature
IC8T-24

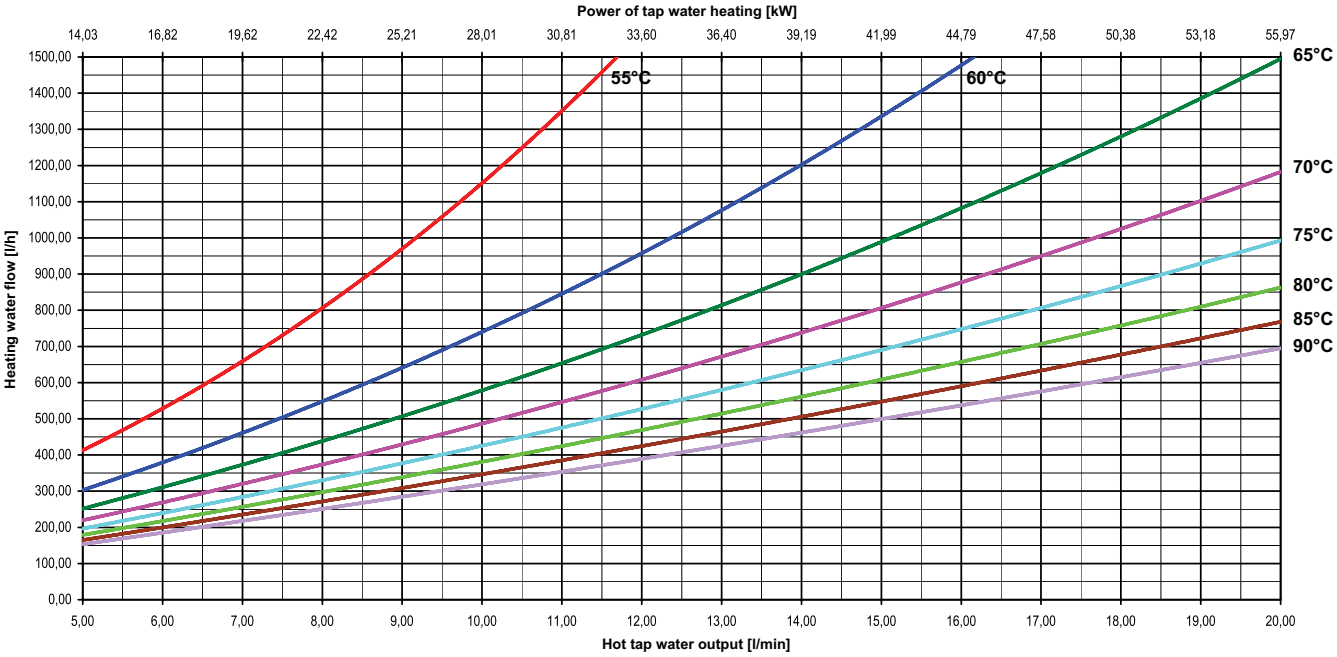

Return temperature during draw off

Reachable return temperature of heating water to increase the tap water by 40 K (10°C to 50°C) in relation to the supply temperature
IC8T-24

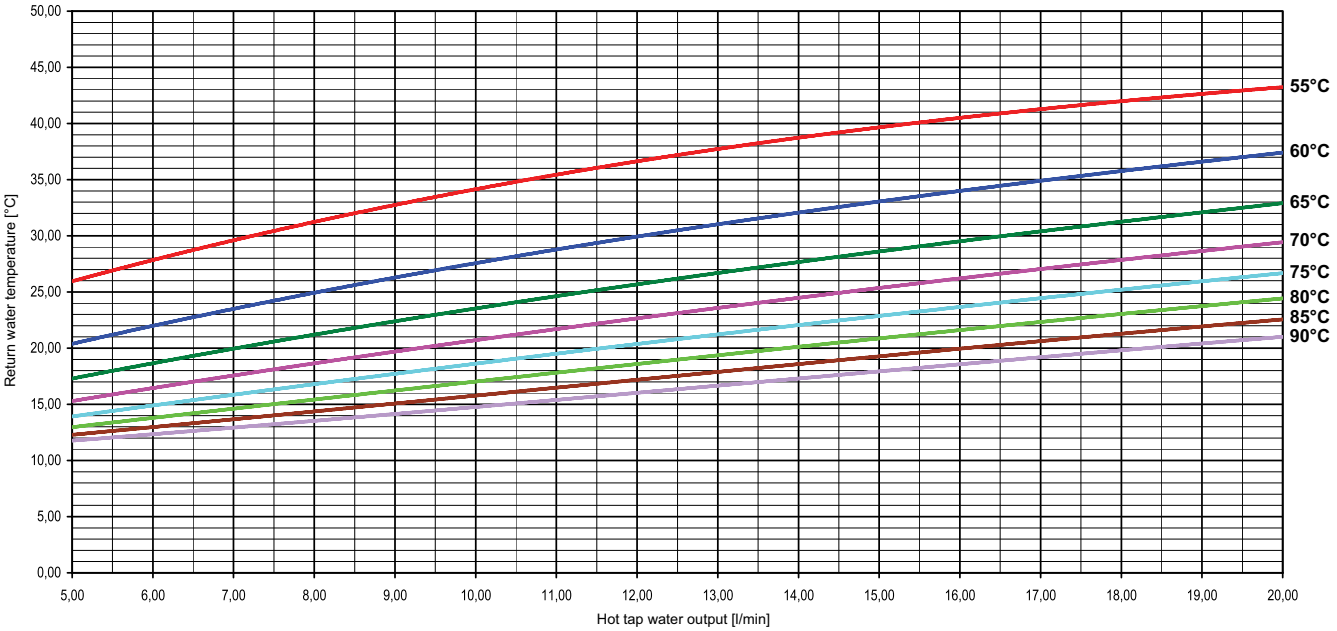

Pressure drop heating side during draw off

Pressure drop of the primary side of the station in relation to the flow of heating water for max. tap water power (PM controller max. open) thermal circulation bridge closed

IC8T-24

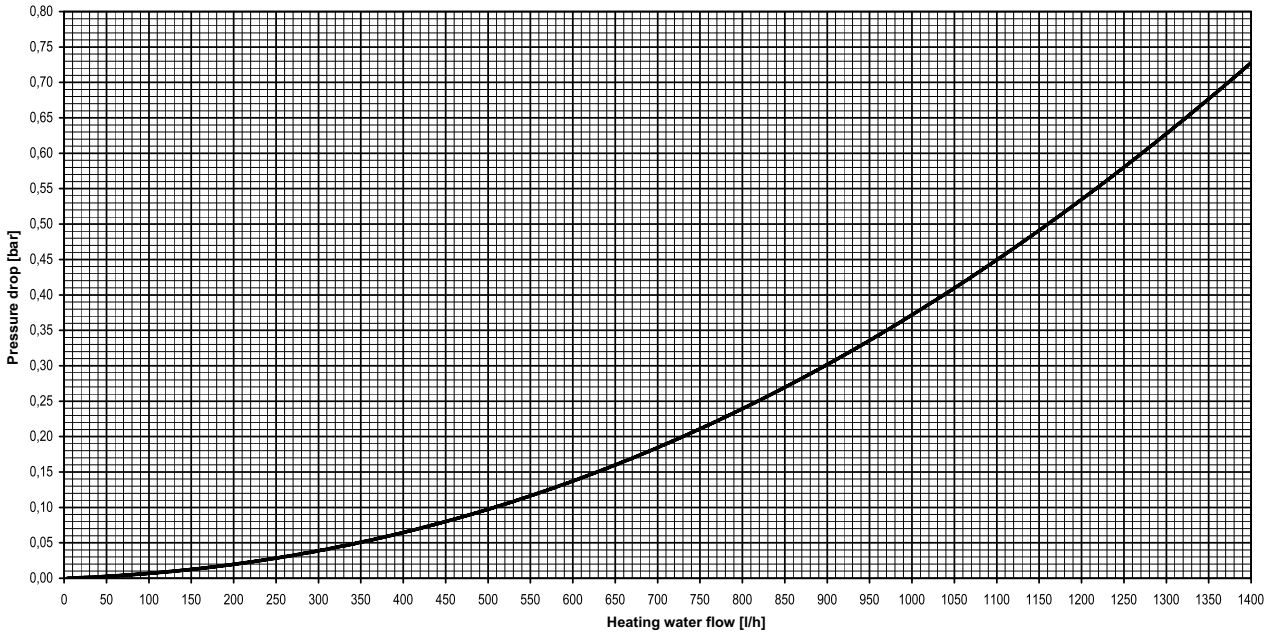

Pressure drop tap water side during draw off

Pressure drop of the secondary side of the station in relation to the tap water flow (without tap water flow limiter) max. tap water draw off (PM controller max. open)

IC8T-24

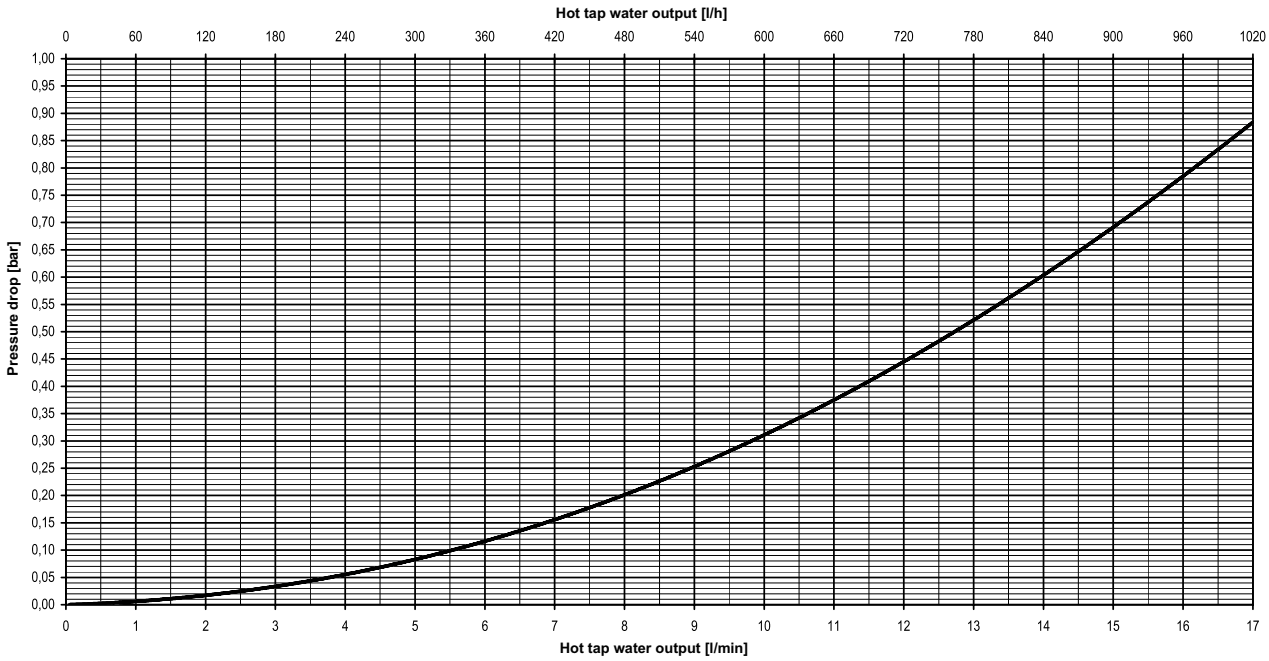

Diagrams – TA-COMFORT 42 kW

Hot tap water flow

Required flow of heating water to increase the tap water by 40 K (10°C to 50°C) in relation to the supply temperature
WP 24-20

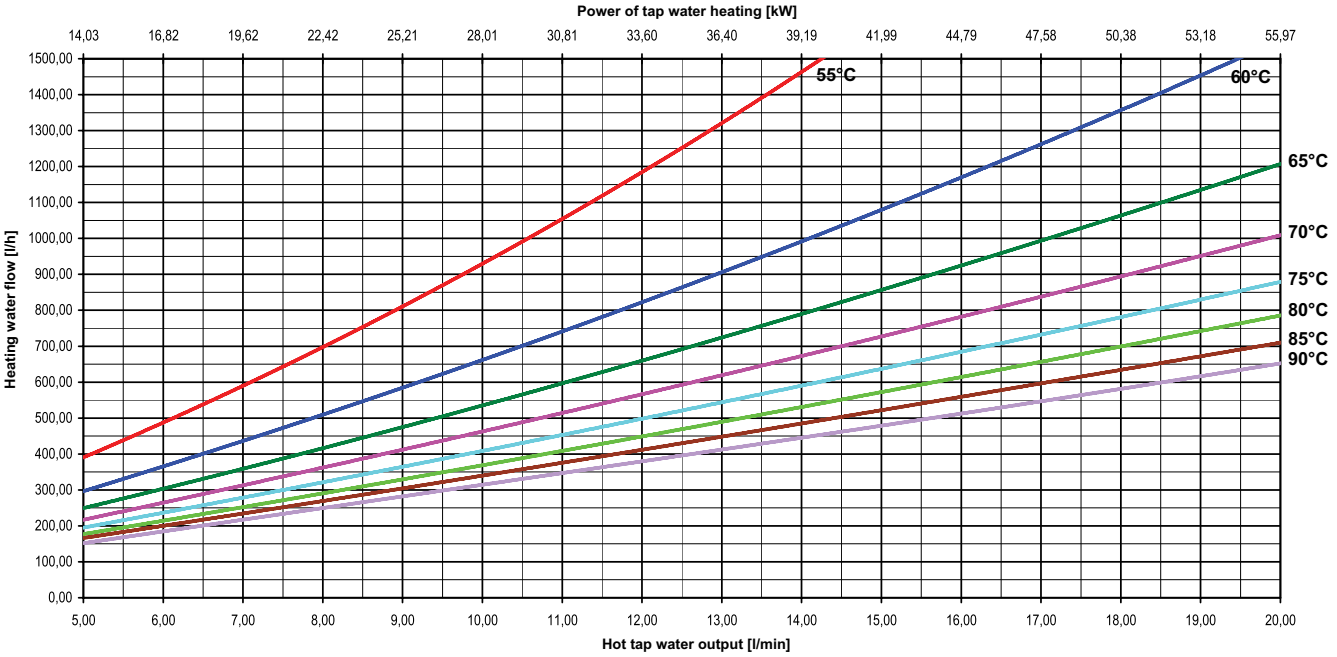

Return temperature during draw off

Reachable return temperature of heating water to increase the tap water by 40 K (10°C to 50°C) in relation to the supply temperature
WP 24-20

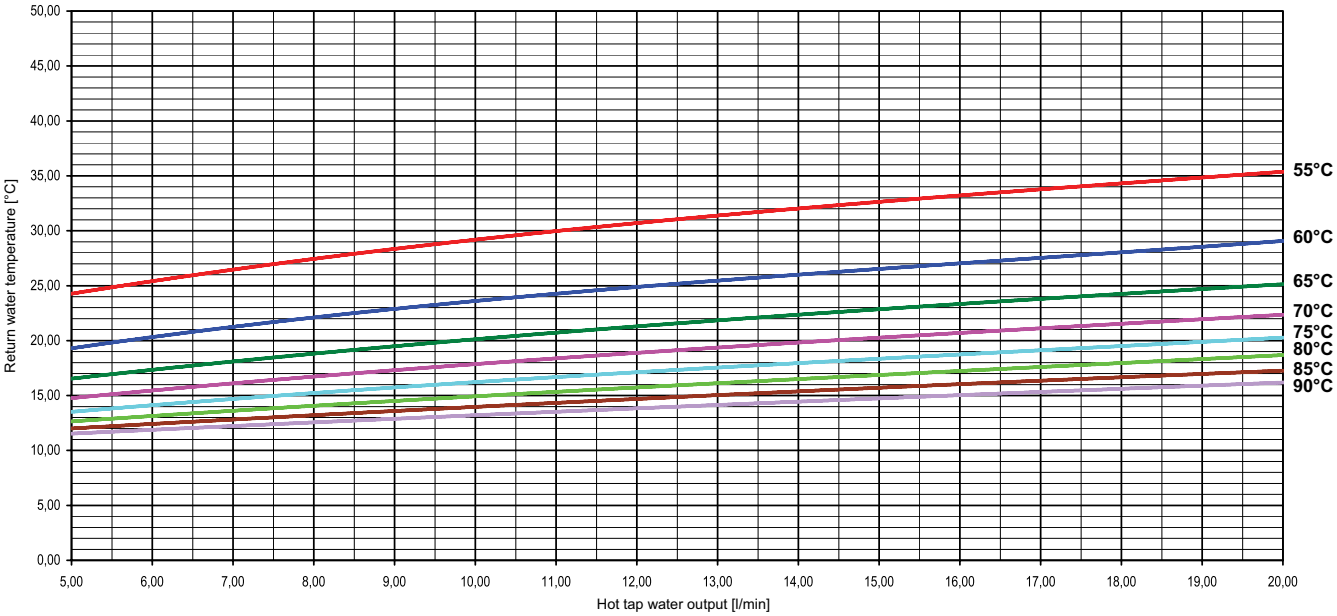

Pressure drop heating side during draw off

Pressure drop of the primary side of the station in relation to the flow of heating water for max. tap water power (PM controller max. open) thermal circulation bridge closed

WP 24-20

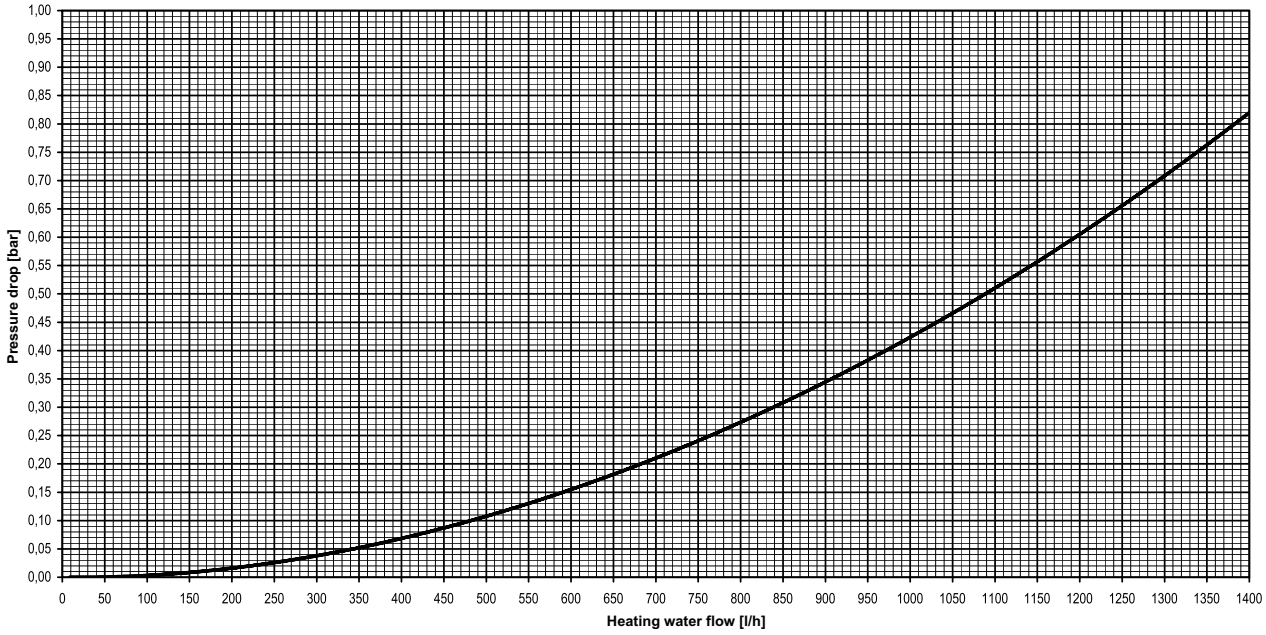

Pressure drop tap water side during draw off

Pressure drop of the secondary side of the station in relation to the tap water flow (without tap water flow limiter) max. tap water draw off (PM controller max. open)

WP 24-20

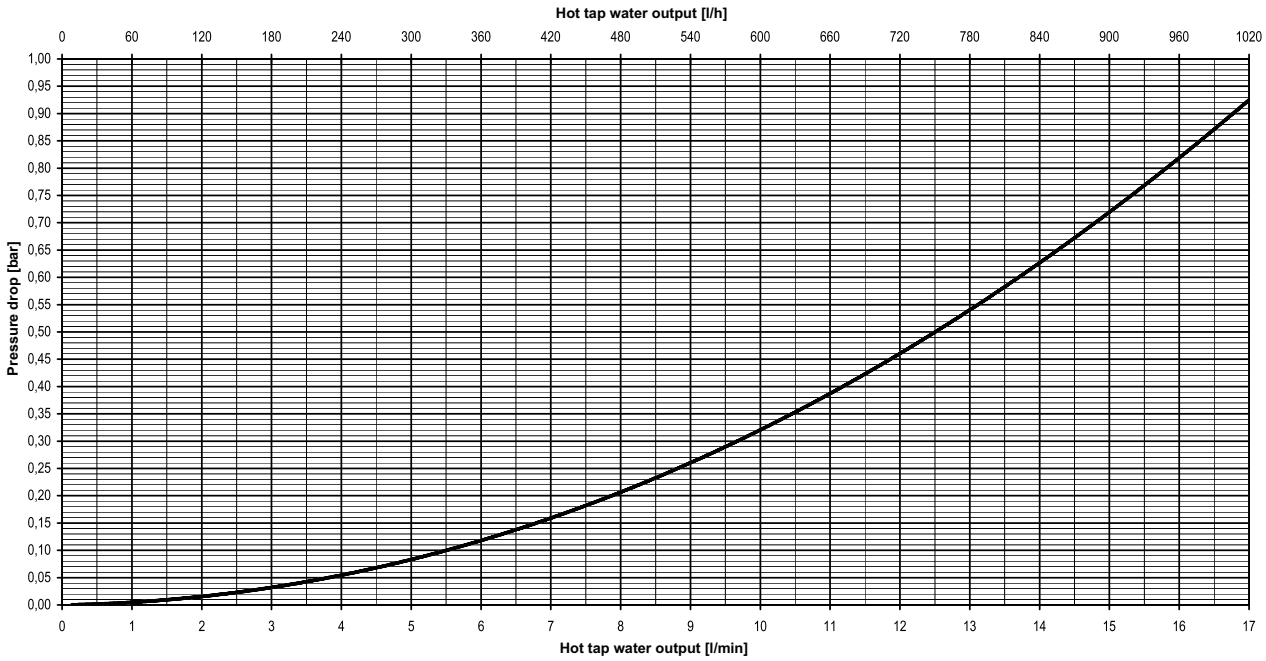

Diagrams – TA-COMFORT 46 kW

Hot tap water flow

Required flow of heating water to increase the tap water by 40 K (10°C to 50°C) in relation to the supply temperature
WP 24-30

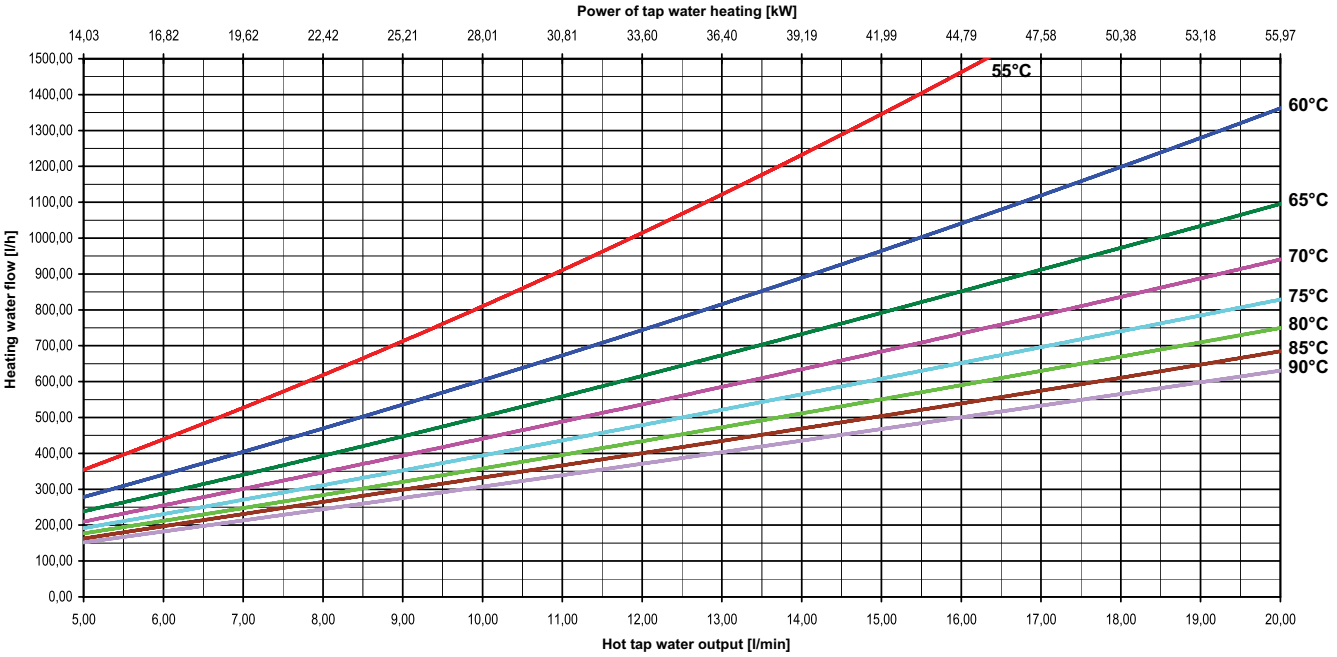

Return temperature during draw off

Reachable return temperature of heating water to increase the tap water by 40 K (10°C to 50°C) in relation to the supply temperature
WP 24-30

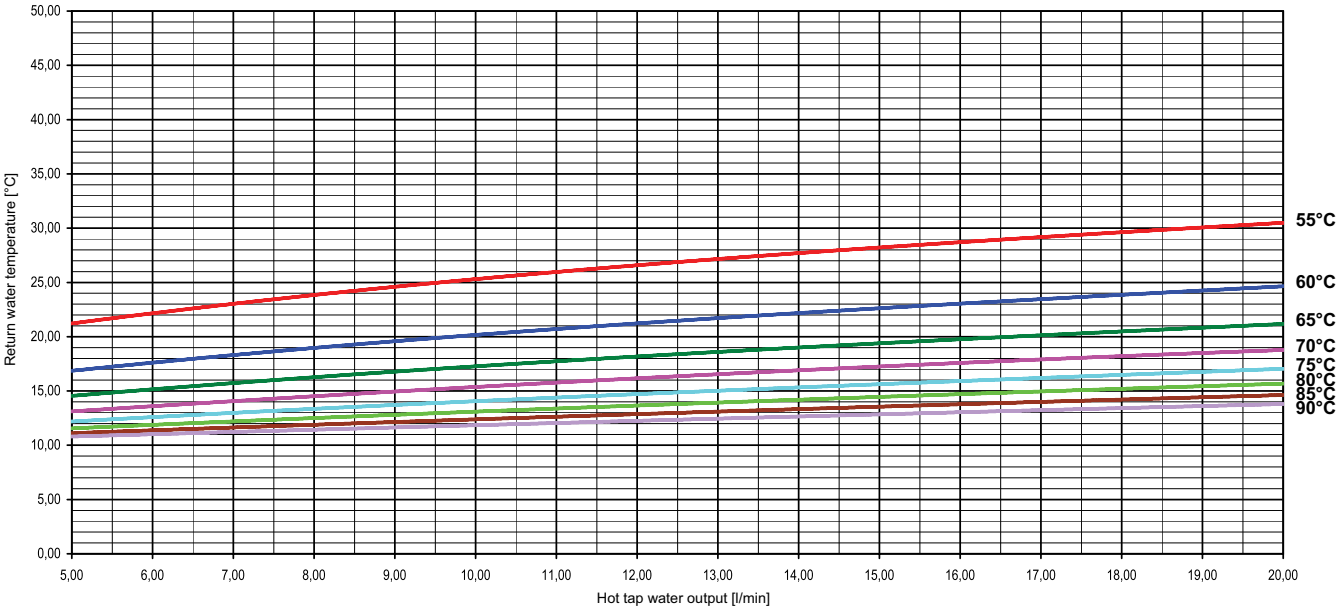

Pressure drop heating side during draw off

Pressure drop of the primary side of the station in relation to the flow of heating water for max. tap water power (PM controller max. open) thermal circulation bridge closed

WP 24-30

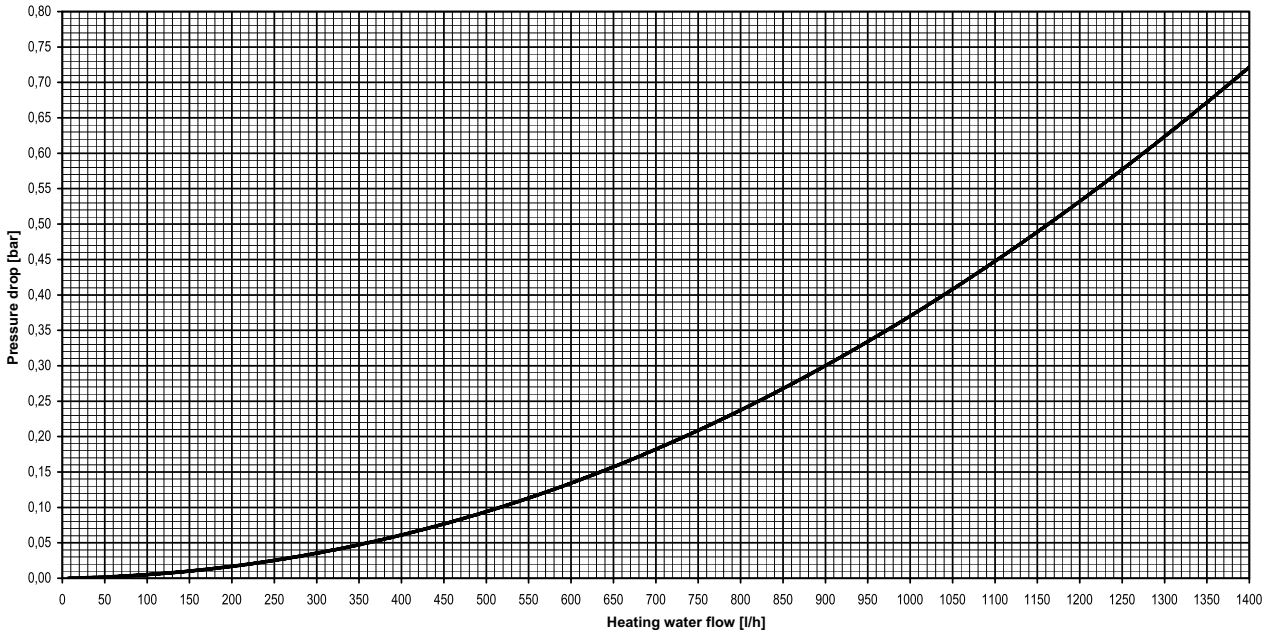

Pressure drop tap water side during draw off

Pressure drop of the secondary side of the station in relation to the tap water flow (without tap water flow limiter) max. tap water draw off (PM controller max. open)

WP 24-30

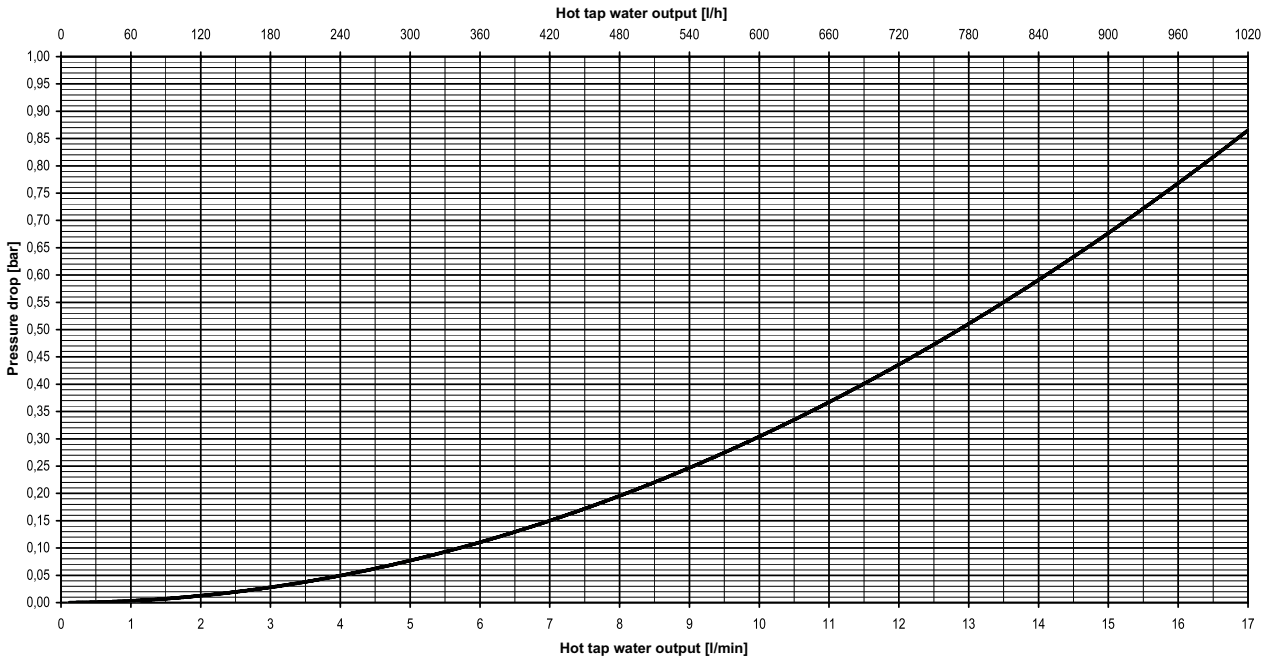

Articles – with scalding protection

TA-COMFORT-WSM with one heat exchanger and scalding protection

Type TA-COMFORT-_	Max. output service water Q [kW]	Draw-off volume (10/50°C) [l/min]	Heat exchanger	Max. pressure loss without heat meter [kPa]	Article No
Dummy for water meter 80 mm					
WSM 35 - 80	35	12	IC8T-24	20	26101-201135
WSM 42 - 80	42	15	WP24-20	30	26101-201242
WSM 46 - 80	46	17	WP24-30	30	26101-201346
Dummy for water meter 110 mm					
WSM 35 - 110	35	12	IC8T-24	20	26101-202135
WSM 42 - 110	42	15	WP24-20	30	26101-202242
WSM 46 - 110	46	17	WP24-30	30	26101-202346

TA-COMFORT-WSM LT with one heat exchanger and scalding protection, low temperature

Type TA-COMFORT-_	Max. output service water Q [kW]	Draw-off volume (10/50°C) [l/min]	Heat exchanger	Max. pressure loss without heat meter [kPa]	Article No
Dummy for water meter 80 mm					
WSM LT 25 - 80	25	12	WP24-30	30	26101-301125

TA-COMFORT-WDM with two heat exchangers and scalding protection

Type TA-COMFORT-_	Max. output service water Q [kW]	Draw-off volume (10/50°C) [l/min]	Heat exchanger	Max. pressure loss without heat meter [kPa]	Article No
Dummy for water meter 80 mm					
WDM 46 - 80	46	24/44	2xWP24-30	30	26101-501446
Dummy for water meter 110 mm					
WDM 46 - 110	46	24/44	2xWP24-30	30	26101-502446

Articles – without scalding protection

TA-COMFORT-WS with one heat exchanger

Type TA-COMFORT-_	Max. output service water Q [kW]	Draw-off volume (10/50°C) [l/min]	Heat exchanger	Max. pressure loss without heat meter [kPa]	Article No
Dummy for water meter 80 mm					
WS 35 - 80	35	12	IC8T-24	20	26101-101135
WS 42 - 80	42	15	WP24-20	30	26101-101242
WS 46 - 80	46	17	WP24-30	30	26101-101346
Dummy for water meter 110 mm					
WS 35 - 110	35	12	IC8T-24	20	26101-102135
WS 42 - 110	42	15	WP24-20	30	26101-102242
WS 46 - 110	46	17	WP24-30	30	26101-102346

Accessories

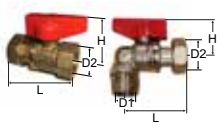

Ball valves
with union end

Type	D	L	H	Kg	Article No
Straight	3/4”	60	40	0,23	26104-030001
Angle	3/4”	40	40	0,28	26104-030002

Temperature maintaining bypass

Type	Setting range	D	Article No
35 kW	45-65°C	3/4”	26104-030011
42 kW	45-65°C	3/4”	26104-030012
46 kW	45-65°C	3/4”	26104-030013

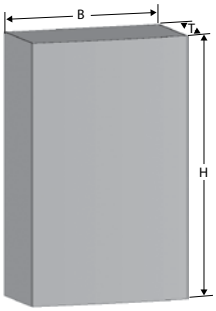

Flush-mounted cover
White RAL 9016

Type	H	B	T	Article No
35 kW	500	310	160	26104-010211
42 kW	637	440	180	26104-010212
46 kW	637	440	180	26104-010213