IMI HEIMEIER

Dynatec Eclipse

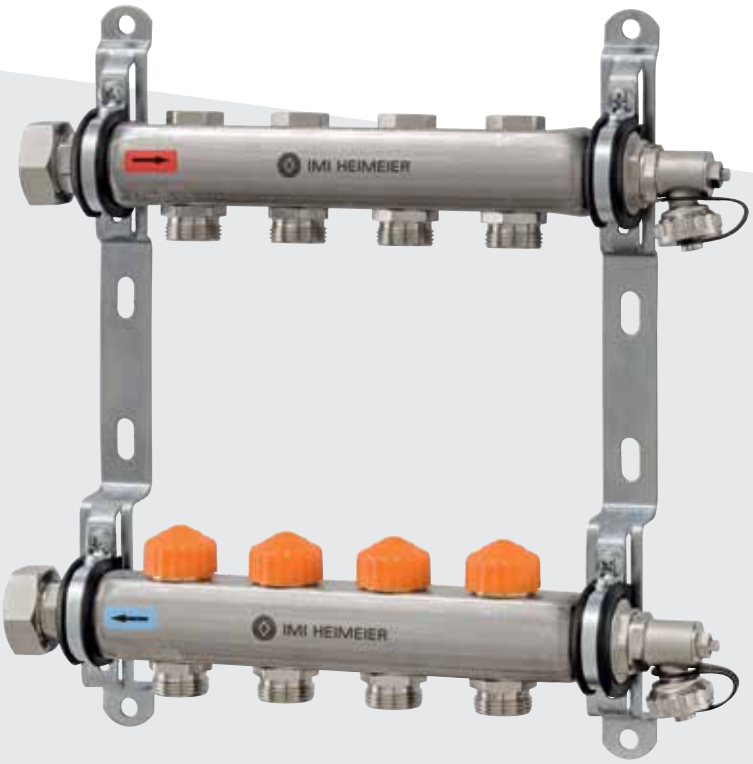

AFC Automatic Flow Control

Floor Heating Manifolds

Floor heating manifold with automatic flow control

Engineering GREAT Solutions

IMI Hydronic Engineering

Dynatec Eclipse

Dynatec Eclipse adjusts the flow rate in the individual heating circuits directly in l/h. This means hydraulic balancing is achieved in one simple operation. The set flow rate is constantly adapted, i.e. if the rate becomes too high, e.g. due to closing adjacent circuits, Dynatec Eclipse controls the flow automatically to the set value. The control cartridge always ensures a constant flow. This makes Dynatec Eclipse heating circuit manifolds a time and cost-saving solution especially for system commissioning.

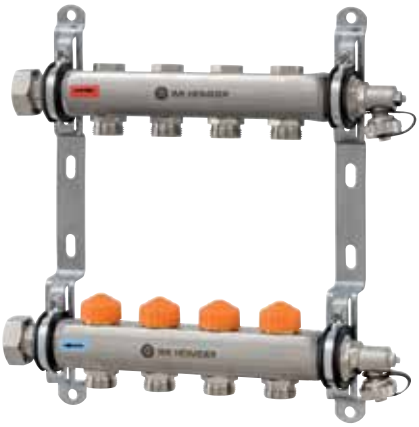

Key features

- **Automatic hydraulic balancing** due to integrated flow controller inside each thermostatic insert
- **Shut-off valve for each heating circuit** in supply
- **Manifold made of stainless steel** corrosion-resistant, durable and safe
- **Time and cost-saving commissioning solution**

Technical description

Application:
Floor heating systems

Function:
Individual room temperature control with actuator or thermostatic head
Flow limitation
Shut off
Filling
Draining
Flushing
Venting

Pressure class:
PN 10

Flow range:
The flow can be stepless pre-set within the range: 30-300 l/h.
Delivery setting 300 l/h.

Differential pressure (ΔpV):
Max. differential pressure:
60 kPa (<30 dB(A))
Min. differential pressure:
30 – 150 l/h = 15 kPa
150 – 300 l/h = 20 kPa

Temperature:
Max. working temperature: 90°C
Min. working temperature: -5°C

Material:
Manifold:
Stainless steel 1.4301
Connection fittings: Nickel-plated brass.

Thermostatic insert:
Brass
O-rings: EPDM
Valve disc: EPDM
Spring: stainless steel
Thermostatic insert: Brass, PPS (polyphenylsulphide)
Spindle: Niro-steel spindle with double O-ring seal. The outer O-ring is replaceable under pressure.

Flow meter:
Heat-resistant plastic and stainless steel. Brass. EPDM seals.

Filling, draining, flushing and venting device:
Nickel-plated brass and plastic.
EPDM seals.

Marking:
IMI Heimeier

Manifold boxes:
Manifold boxes available as surface-mounted and flush-mounted versions.

Connection kits:
The following manifold connection kits are available:
- Connection kit 1 with Globo ball valves
- Connection kit 2 with STAD balancing valve and Globo ball valve
- Connection kit 3 with Zeparo Vent air separator in supply pipe and Zeparo Dirt sludge separator in return
- Connection kit 4 with Globo ball valve, including spacer for heat meter in return and Globo ball valve with connection for direct measurement in supply and return pipe.
- Connection kit 5 fixed value control station with high-efficiency pump for controlling the supply temperature.

Pipe connection:
Manifold with flat-sealing connection, 1” union nut.
Heating ciruit connection G 3/4 adaptor with Eurcone suitable for compression fittings for plastic, copper, precision steel and multi-layer pipe.
See also accessories.

Manifold boxes:
Manifold boxes available as surface-mounted and flush-mounted versions.

Connection to thermostatic head and actuator:
IMI Heimeier M30x1.5

Construction

Eclipse thermostatic insert with automatic flow control

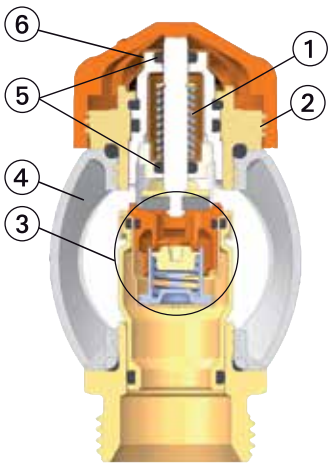

1. Strong return spring in combination with high locating force ensures that the valve does not slacken off over time
2. HEIMEIER M30x1.5 connection for thermostatic heads and actuators
3. Automatic flow limiter
4. Manifold
5. Long-life double O-ring sealing
6. Flow setting

Shut-off

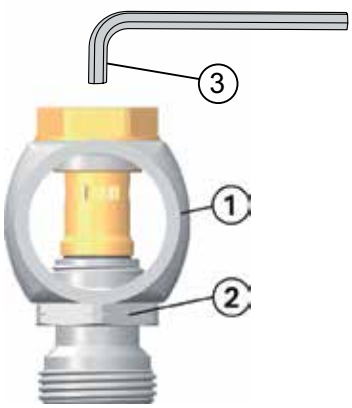

1. Manifold
2. Connection nipple
3. Hexagon key SW 5

Filling, draining, flushing and venting device

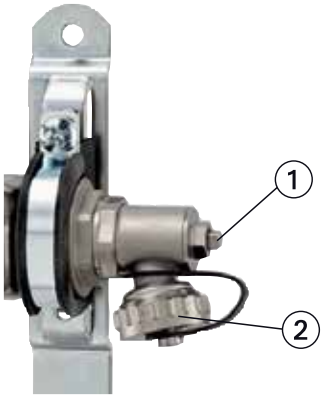

1. Venting
2. Filling-, draining and flushing, 3/4” connection, swiveling

Function

Eclipse flow limiter

A regulating part is set to the calculated control rate by turning the digit cap with the setting key or an 11 mm end wrench. If the flow rate increases at the valve the rising pressure moves the sleeve, thus constantly limiting the flow to the set value. The set flow rate is therefore never exceeded.

If the flow rate drops below the set value a spring presses the sleeve back to its original position.

Application

Dynatec Eclipse adjusts the flow rate in the individual heating circuits directly in l/h. This means hydraulic balancing is achieved in one simple operation. The set flow rate is constantly adapted, i.e. if the rate becomes too high, e.g. due to closing adjacent circuits, Dynatec Eclipse controls the flow automatically to the set value. The control cartridge always ensures a constant flow. This makes Dynatec Eclipse heating circuit manifolds a time and cost-saving solution especially for system commissioning.

With conventional heating circuit manifolds with throttle valves and flow indicators setting the required water quantities is a time-consuming affair. The setting required at the throttle valves must either be calculated or set using flow indicators at the manifold. However, the quantities of water distributed in this way only correspond to maximum requirements. When individual heating circuits are turned off, the quantity of water no longer required is distributed over the adjacent circuits resulting in an oversupply in these circuits.

The automatic hydraulic balance with Dynatec Eclipse avoids this oversupply in individual heating circuits. This ensures optimum temperature distribution, saves energy and increases comfort.

Sample application

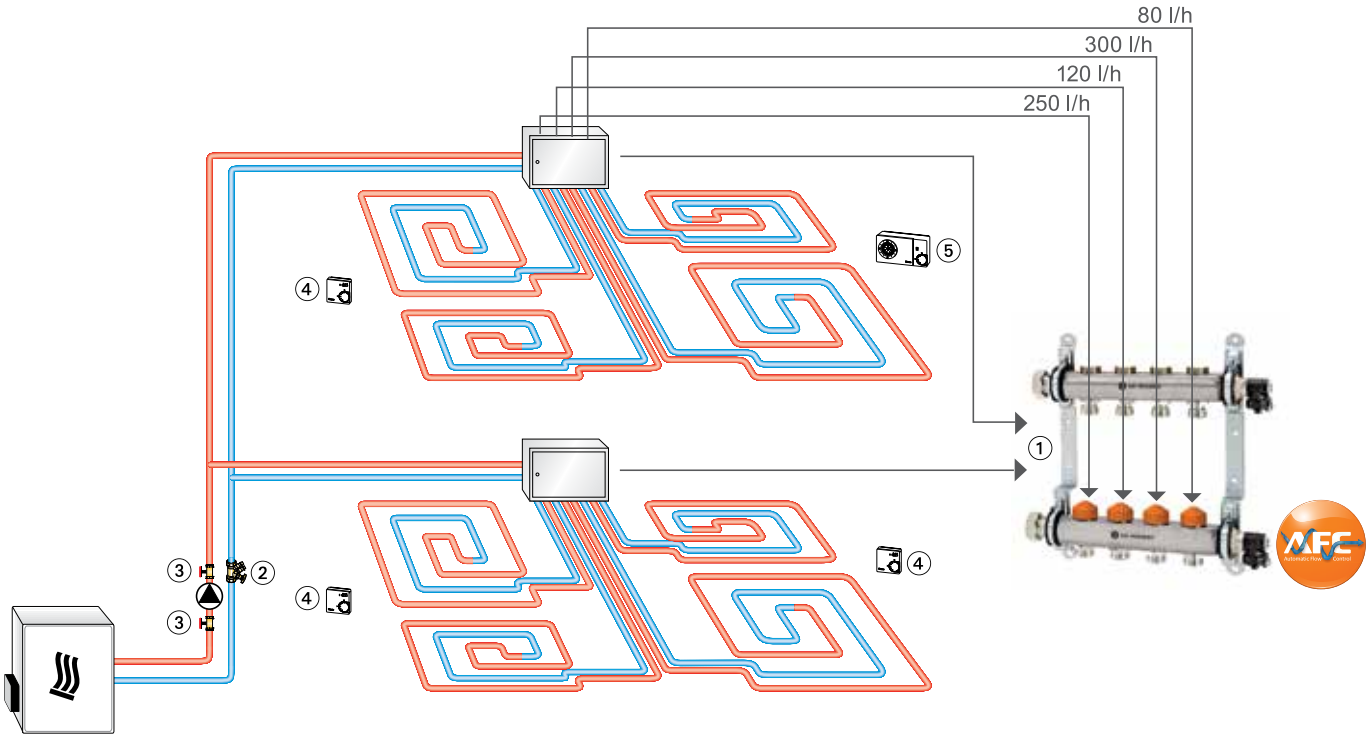

1. Dynatec Eclipse
2. STAD balancing valve
3. Globo P pump ball valve
4. Room thermostat
5. Thermostat P with switch clock

Operation

Flow setting

Stepless setting between 3 to 30 (30 to 300 l/h).
The setting is changed using a special setting key (article No. 3930-02.142) or an 11 mm end wrench, to ensure tamper proof setting.

- Place the setting key on the valve insert.
- Turn the setting tool so that desired setting value is pointing at the index* of the valve body (see fig.).
- Remove the key or 11 mm end wrench. The valve is now set.

Front-end and lateral visibility

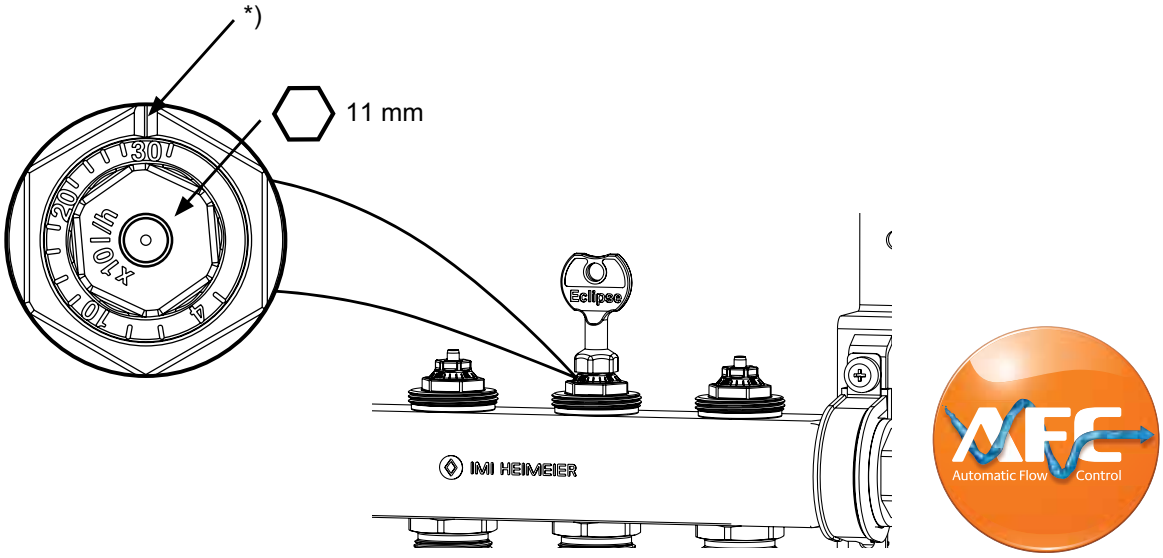

*) Index

Setting	I	4	I	I	10	I	I	I	I	20	I	I	I	I	30
l/h	30	40	60	80	100	120	140	160	180	200	220	240	260	280	300

Filling, flushing and venting

Product lifetime and system performance strongly depend on proper commissioning. We refer to technical standards EN 14336, VDI2035 and ON H5195-1 to be carefully attended.

Each heating circuit must be individually filled, flushed and vented:

– Close the ball/shut-off valves (1). Close all thermostatic inserts with the protection caps (4). All flow controllers (2) or flow meters/shut-off valves (3) must be completely open!
– Connect the fill- and drain hose and open the filling, draining, flushing and venting device (5).
– Fill/Flush the circuits each by each.
– Open the thermostatic insert of the 1. heating circuit with the protection cap (4) completely. After flushing the 1. circuit close the corresponding thermostatic insert and fill/flush the next circuit.

Setting of the flow controller or flow meter: See „Installation and operating instruction“.

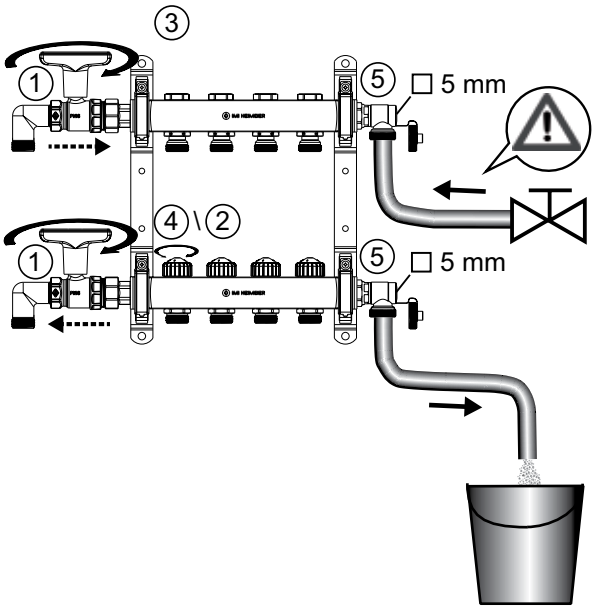

Pressure test

Pressure test duration before and during screed laying. The test pressure is 1.3 times of the permissible operating pressure.

Thermal fluid

To stop any damage and scale in hot water heating systems, the composition of the thermal fluid is to conform to VDI Directive 2035. For industrial and longdistance energy systems, see applicable codes VdTÜV and 1466/AGFW FW 510.
Mineral oil in the thermal fluid and/or all kinds of lubricants containing mineral oil lead to considerable swelling and, in most cases, to the failure of EPDM seals.
When using nitrite-free antifreeze and anti-corrosive based on ethylene glycol, technical advice – especially on additive concentration – is to be taken from the anti-freeze/anti-corrosive manufacturer’s documentation.

Functional heating

Carry out functional heating of heating screed conforming to standards in keeping with EN 1264-4.

Earliest start for functional heating:

– Cement screed: 21 days after laying
– Anhydrite screed 7 days after laying

Begin 20 °C - 25 °C flow temperature and maintain for 3 days. Then set maximum design temperature and maintain for 4 days. Flow temperature can be regulated by controlling the heat generator.
Refer to the screed manufacturer’s information!

Do not exceed maximum floor temperature at the heating pipes:

– Cement and anhydrite screed: 55 °C
– Poured asphalt screed: 45 °C
– according to screed manufacturer’s technical advice!

Technical data

Flow rate range per heating circuit: 30 - 300 l/h

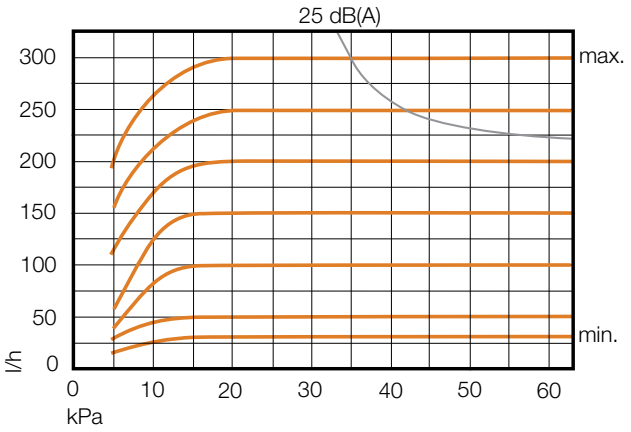

Δp min. 30 – 150 l/h = 17 kPa
Δp min. 150 – 300 l/h = 25 kPa
Δp max. 60 kPa

Sample calculation
Target:
Set value of Dynatec Eclipse flow controller

Given:
Heat flow, heating circuit Q = 1120 W
Temperature spread Δt = 8 K (44/36°C)

Solution:
Mass flow m = Q / (c · Δt) = 1120 / (1.163 · 8) = 120 kg/h

Flow regulator setting at Dynatec Eclipse manifold: = **12**

Lowest flow tolerances

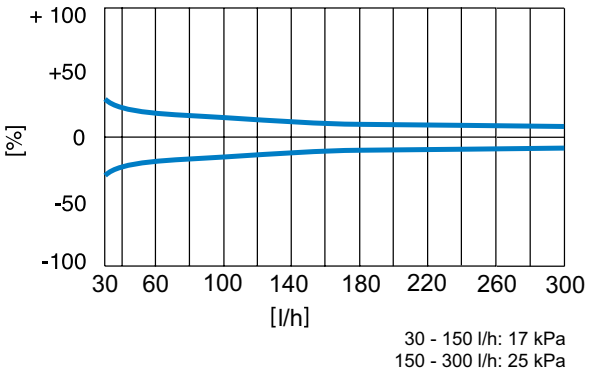

Setting values with different heating performances and system differential temperatures

Q [W]	200	250	300	400	500	600	700	800	900	1000	1200	1400	1600	1800	2000	2200	2400	2600	2800	3000	3200	3400	3600	3800	4000	4800	5200
Δt [K]																											
5	3	4	5	7	9	10	12	14	16	17	21	24	28														
8			3	4	5	7	8	9	10	11	13	15	17	19	22	24	26	28									
10				3	4	5	6	7	8	9	10	12	14	16	17	19	21	22	24	26	28	29					
15					3	3	4	5	5	6	7	8	9	10	12	13	14	15	16	17	18	20	21	22	23	28	30

Δp min. 30 - 150 l/h = 17 kPa
Δp min. 150 - 300 l/h = 25 kPa

Q = Heating performance
Δt = System differential temperature
Δp = Differential pressure

Sample:
Q = 1000 W, Δt = 15 K
Setting value: **6** (≈ 60 l/h)

Articles

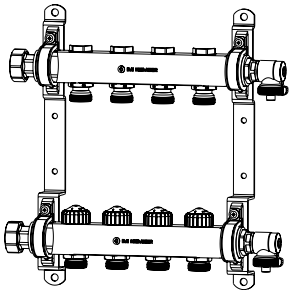

Dynatec Eclipse underfloor heating circuit manifold

Heating circuits	EAN	Article No
2	4024052987719	9344-02.800
3	4024052987818	9344-03.800
4	4024052987917	9344-04.800
5	4024052988013	9344-05.800
6	4024052988112	9344-06.800
7	4024052988211	9344-07.800
8	4024052988310	9344-08.800
9	4024052988419	9344-09.800
10	4024052988518	9344-10.800
11	4024052988617	9344-11.800
12	4024052988716	9344-12.800

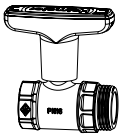

Connection kit 1 with Globo ball valves, DN 20

with red end cap in supply and blue end cap in return.

Kvs	EAN	Article No
9,90	4024052770816	9339-01.800

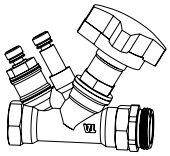

Connection kit 2 with STAD balancing valve and Globo ball valve, DN 20

including measuring nipple for measuring differential pressure and flow rate.

Kvs	q_{max} [m³/h]	EAN	Article No
5,28	2,00	4024052775316	9339-02.800

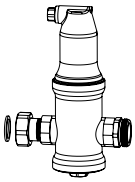

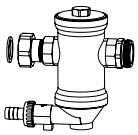

Connection kit 3 with Zeparo Vent air separator in supply and Zeparo Dirt sludge separator in return, DN 20

Kvs	q_{max} [m³/h]	EAN	Article No
6,72	1,25	4024052775415	9339-03.800

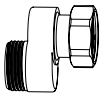

S-connection

For connection kit 3. Installation aid for return in manifold boxes.

	EAN	Article No
	4024052775712	9339-00.362

Kvs = m³/h at a pressure drop of 1 bar and fully open valve.

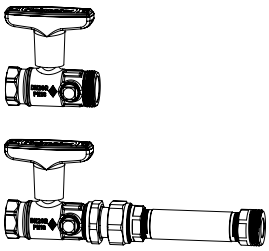

Connection kit 4 with Globo ball valve DN 20, including spacer for heat meter in return
Globo ball valve with connection G1/4 for direct measurement in supply and return.

Kvs	EAN	Article No
9,90	4024052775613	9339-04.800

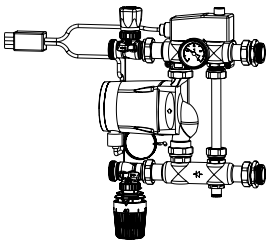

Connection kit 5, fixed value control station
with high-efficiency pump Grundfos Alpha 2 15 - 60 130, thermostatic valve with contact sensor and electrical pipe contact safety switch 230V, 15A.
Minimum installation depth manifold boxes: 125 mm.

Setting range thermostatic head	Setting range electrical pipe-contact sensor	EAN	Article No
20 - 50°C	10 - 90°C	4024052775514	9339-05.800

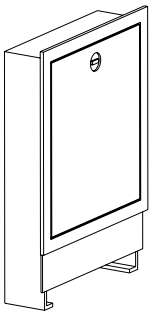

Manifold boxes
Flush-mounted box, installation depth 110 - 150 mm
Note the minimum installation depth 125 mm for connection set 5!

Size	B x H	EAN	Article No
1	490 x 710 mm	4024052790616	9339-80.800
2	575 x 710 mm	4024052790715	9339-81.800
3	725 x 710 mm	4024052790814	9339-82.800
4	875 x 710 mm	4024052790913	9339-83.800
5	1.025 x 710 mm	4024052791019	9339-84.800
6	1.175 x 710 mm	4024052791118	9339-85.800

Kvs = m^3/h at a pressure drop of 1 bar and fully open valve.

Accessories

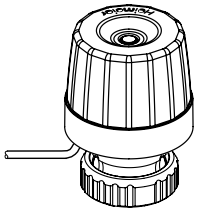

EMOtec

Two-point thermal actuator for floor heating systems. With position indicator in NC version. Suitable for all HEIMEIER thermostatic valve bodies. For technical data, please refer to the EMOtec datasheet.

Type	EAN	Article No
230 V		
Currentless closed (NC)	4024052460359	1807-00.500
Currentless open (NO)	4024052490752	1809-00.500
24 V		
Currentless closed (NC)	4024052460458	1827-00.500
Currentless open (NO)	4024052491551	1829-00.500

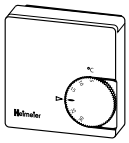

Room thermostat

with thermal recirculation, controls the room temperature in connection with thermal actuators.

Model	EAN	Article No
230 V		
Without temperature set-back	4024052405916	1936-00.500
With temperature set-back	4024052406111	1938-00.500
24 V		
Without temperature set-back	4024052406012	1946-00.500

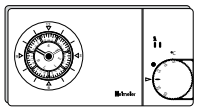

Thermostat P with analog switch clock

electronic two-point room thermostat for time-dependent control of the room temperature, with analog 7-day automatic timer, pulse-width modulation output signal (PWM) and floating change-over contact.

Model	EAN	Article No
230 V	4024052405718	1932-00.500

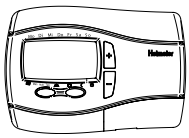

Thermostat P with digital switch clock

electronic two-point room thermostat for time-dependent control of the room temperature, with digital automatic timer, pulse-width modulation output signal (PWM) and floating change-over contact. Menu-driven via four buttons.

Model	EAN	Article No
230 V	4024052763610	1932-01.500

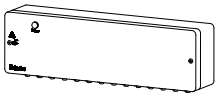

Distributor strip

This unit is used for wiring thermostats and electro-thermal actuators. The unit is suitable for underfloor heating and cooling (summer/winter operation). It is possible to switch over between heating and cooling via an external signal. The pump logic enables enery-optimised pump control. For up to 6 zones (rooms). Ready to plug in to a 230 V power socket.

	EAN	Article No
	4024052891115	1612-00.000

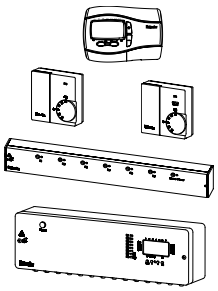

Radiocontrol F

Radio control system for individual room temperature control of floor, wall or ceil heating and cooling in connection with thermal two-point actuators (e.g. “EMO T”/”EMOtec”).

Room transmitter

battery-driven electronic Fuzzy controller, including battery.

Type	EAN	Article No
with digital timer, incl. battery	4024052763511	1640-02.500
without operating mode switch, incl. battery	4024052556915	1640-01.500
with operating mode switch, incl. battery	4024052556816	1640-00.500

Central unit

Receives the room transmitters radio signals. With 8 or 6 output channels for the connection of the thermal actuators.

Model Central unit	EAN	Article No
6 output channels without time clock	4024052557011	1641-00.000
8 output channels with time clock	4024052557110	1642-00.000

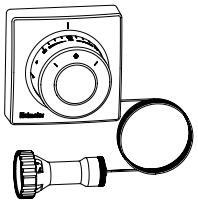

Thermostatic head F

Remote dial with built-in sensor. Liquid filled sensor.
Setting range 0 °C to 27 °C.

Capillary tube length [m]	EAN	Article No
2,00	4024052191017	2802-00.500
5,00	4024052191819	2805-00.500
8,00	4024052192410	2808-00.500
10,00	4024052192717	2810-00.500

Handwheel

for all HEIMEIER thermostatic valve bodies. With direct connection, white.

	EAN	Article No
	4024052323494	1303-01.325

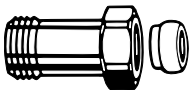

Length adjustment fitting

For clamping plastic, copper, precision steel or multi-layer pipes. For valves with male thread connection G 3/4.
Brass nickel-plated.

	L	EAN	Article No
G3/4 x G3/4	25	4024052298310	9713-02.354
G3/4 x G3/4	50	4024052298419	9714-02.354

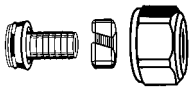

Compression fitting

for plastic pipe according to DIN 4726, ISO 10508. *PE-X*: DIN 16892/16893, EN ISO 15875; *PB*: DIN 16968/16969. Connection male thread G 3/4 according to DIN EN 16313 (Eurocone).
Nickel plated brass.

Ø Pipe	EAN	Article No
14x2	4024052134618	1311-14.351
16x2	4024052134816	1311-16.351
17x2	4024052134915	1311-17.351
18x2	4024052135110	1311-18.351
20x2	4024052135318	1311-20.351

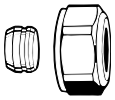

Compression fitting
for copper or precision steel pipe according to DIN EN 1057/10305-1/2. Connection male thread G 3/4 according to DIN EN 16313 (Eurocone).
Metal-to-metal joint.
Brass nickel-plated.
With a pipe wall thickness of 0.8-1 mm insert supporting sleeves. Heed pipe manufacturer's technical advice.

Ø Pipe	EAN	Article No
12	4024052214211	3831-12.351
15	4024052214617	3831-15.351
16	4024052214914	3831-16.351
18	4024052215218	3831-18.351

Support sleeve
for copper or precision steel pipe with a 1 mm wall thickness.
Brass.

Ø Pipe	L	EAN	Article No
12	25,0	4024052127016	1300-12.170
15	26,0	4024052127917	1300-15.170
16	26,3	4024052128419	1300-16.170
18	26,8	4024052128815	1300-18.170

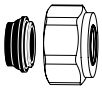

Compression fitting
for copper or precision steel pipe according to DIN EN 1057/10305-1/2 and stainless steel pipe.
Connection male thread G 3/4 according to DIN EN 16313 (Eurocone).
Soft sealed, max. 95°C.
Nickel-plated brass.

Ø Pipe	EAN	Article No
15	4024052515851	1313-15.351
18	4024052516056	1313-18.351

Compression fitting
for Alu/PEX multi-layer pipe according to DIN 16836. Connection male thread G 3/4 according to DIN EN 16313 (Eurocone).
Nickel-plated brass.

Ø Pipe	EAN	Article No
16x2	4024052137312	1331-16.351

Double connection fitting
For clamping plastic, copper, precision steel or multi-layer pipes.
Brass, nickel-plated.

	L	EAN	Article No
G3/4 x R1/2	26	4024052308415	1321-12.083

Double nipple
Both sides for clamping plastic, copper, precision steel or multi-layer pipes.
Brass nickel-plated.

	EAN	Article No
G3/4 x G3/4	4024052136315	1321-03.081

Replacement thermostatic insert
with automatic flow limiter for Dynatec Eclipse.

	EAN	Artikel-Nr.
	4024052966714	9340-00.300

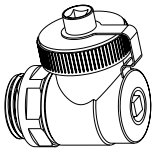

Replacement filling, draining, flushing and venting device 1/2"

	EAN	Artikel-Nr.
1/2"	4024052989218	9321-00.102

Dimensions - manifold and connection kits

A

9344-04.800

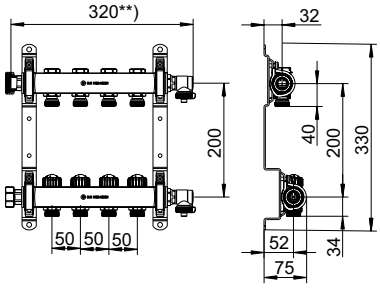

B

9344-04.800 +
9339-01.800

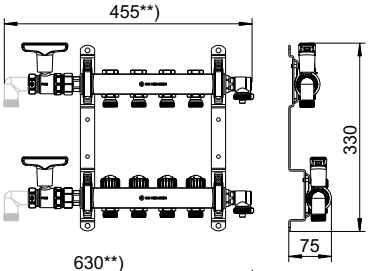

C

9344-04.800 +
9339-02.800

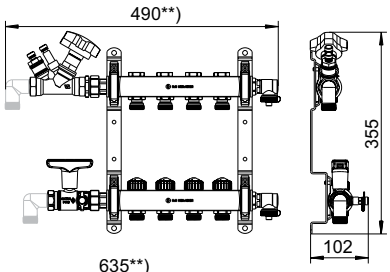

D

9344-04.800 +
9339-01.800 +
9339-03.800 +
9339-00.362

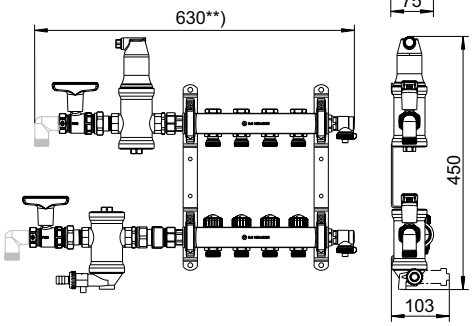

E

9344-04.800
9339-02.800 +
9339-03.800 +
9339-00.362

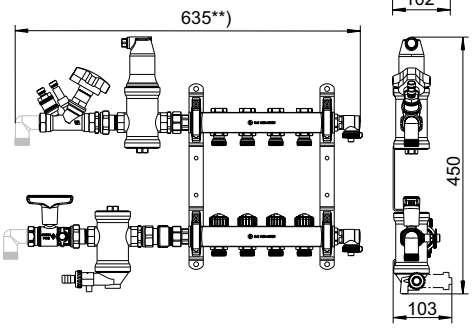

F

9344-04.800 +
9339-04.800

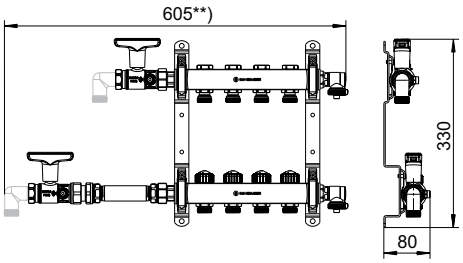

G

9344-04.800 +
9339-05.800

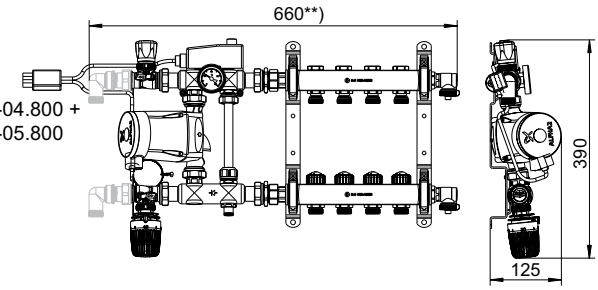

Heating circuit manifold, heating circuits		2	3	4**)	5	6	7	8	9	10	11	12
A	**Length [mm]**	**220**	**270**	**320**	**370**	**420**	**470**	**520**	**570**	**620**	**670**	**720**
B	Length, including kit 1 + 50 mm bend *	355	405	455	505	555	605	655	705	755	805	855
	Box size	**1**	**1**	**2**	**2**	**3**	**3**	**3**	**4**	**4**	**4**	**5**
C	Length, including kit 2 + 50 mm bend *	390	440	490	540	590	640	690	740	790	840	890
	Box size	**1**	**2**	**2**	**3**	**3**	**3**	**4**	**4**	**4**	**5**	**5**
D	Length, including kit 1 and kit 3 + 50 mm bend *	530	580	630	680	730	780	830	880	930	980	1030
	Box size	**3**	**3**	**3**	**4**	**4**	**4**	**5**	**5**	**5**	**6**	**6**
E	Length, including kit 2 and kit 3 + 50 mm bend *	535	585	635	685	735	785	835	885	935	985	1035
	Box size	**3**	**3**	**3**	**4**	**4**	**4**	**5**	**5**	**5**	**6**	**6**
F	Length, including kit 4 + 50 mm bend *	505	555	605	655	705	755	805	855	905	955	1005
	Box size	**2**	**3**	**3**	**3**	**4**	**4**	**4**	**5**	**5**	**5**	**6**
G	Length, including kit 5 Fixed value control station	560	610	660	710	760	810	860	910	960	1010	1060
	Box size	**3**	**3**	**3**	**4**	**4**	**4**	**5**	**5**	**5**	**6**	**6**

*) Supplied without bend

Dimensions - manifold boxes

9339-80/81....800

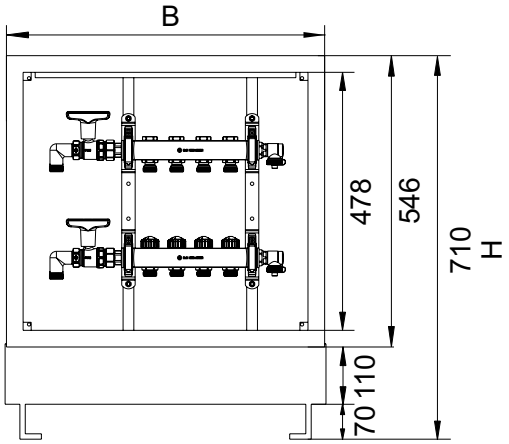

Size	W x H [mm]
Flush-mounted box, installation depth 110 - 150 mm	
1	490 x 710
2	575 x 710
3	725 x 710
4	875 x 710
5	1025 x 710
6	1175 x 710

Note the minimum installation depth 125 mm for connection set 5!

Dynatec Eclipse

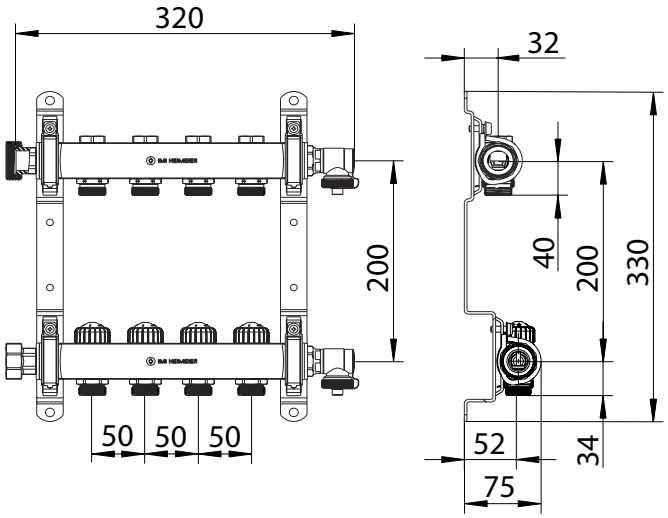

2	9344-02.800
3	9344-03.800
4	9344-04.800
5	9344-05.800
6	9344-06.800
7	9344-07.800
8	9344-08.800
9	9344-09.800
10	9344-10.800
11	9344-11.800
12	9344-12.800

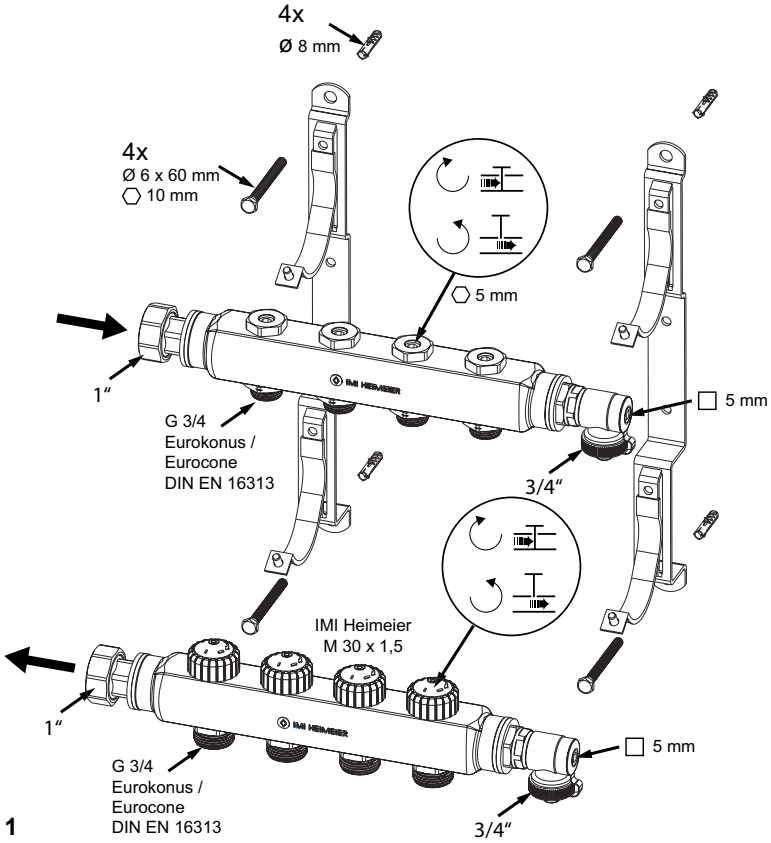

1

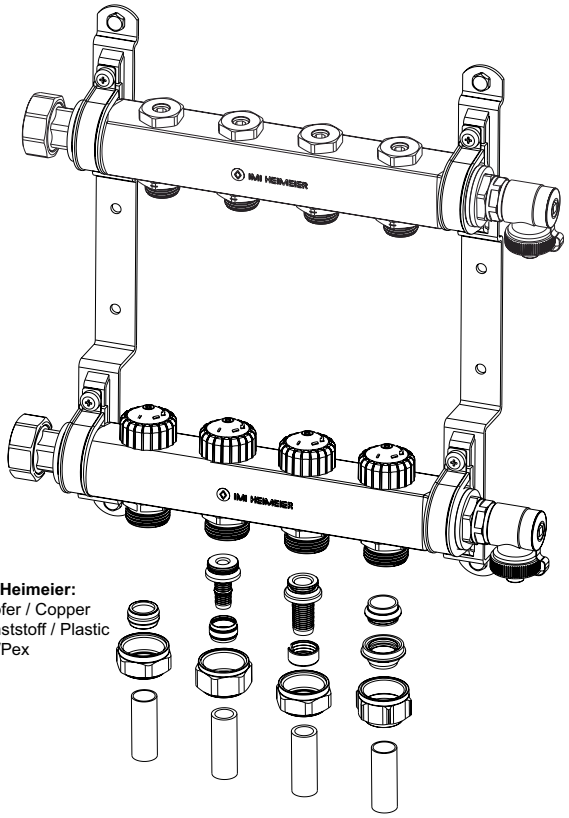

2

We reserve the right to introduce technical alterations without previous notice.

IMI Hydronic Engineering Deutschland GmbH • Völlinghauser Weg • DE 59597 Erwitte
Tel.: +49 (0)2943 891-0 • www.imi-hydronic.com

IMI HEIMEIER

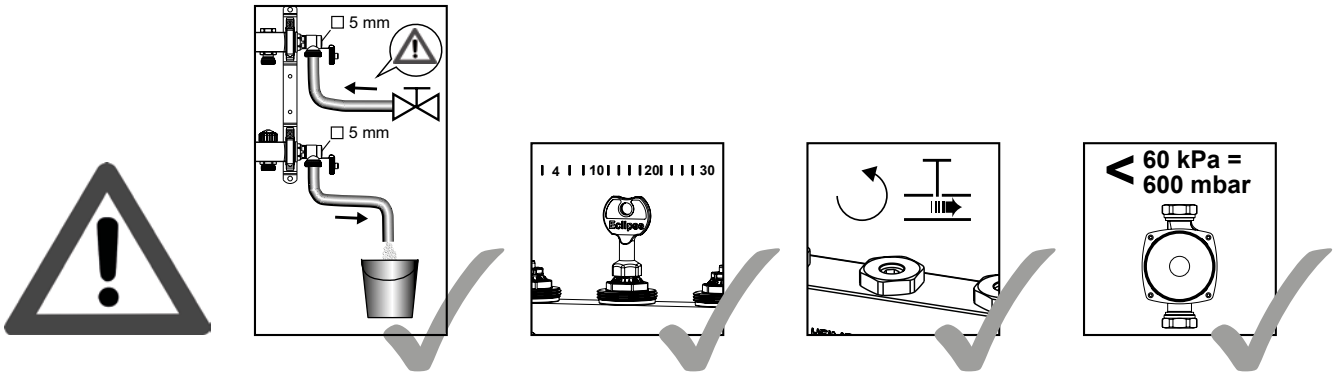

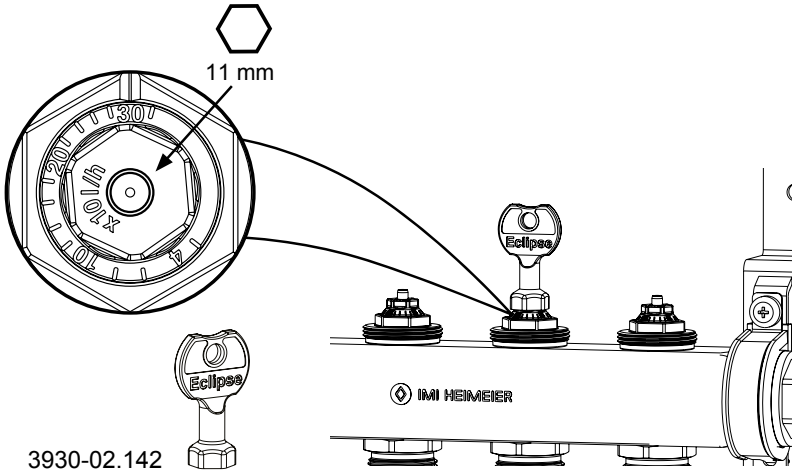

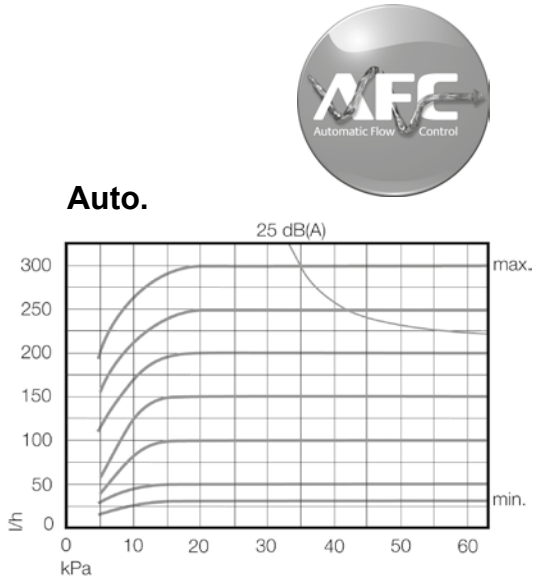

	I	4	I	I	10	I	I	I	I	20	I	I	I	I	30
l/h	30	40	60	80	100	120	140	160	180	200	220	240	260	280	300

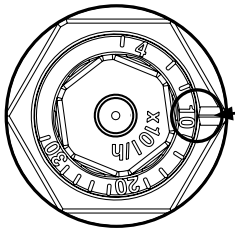

Q [W]	200	250	300	400	500	600	700	800	900	1000	1200	1400	1600	1800	2000	2200	2400	2600	2800	3000	3200	3400	3600	3800	4000	4800	5200
Δt [K]																											
5	3	4	5	7	9	10	12	14	16	17	21	24	28														
8			3	4	5	7	8	9	10	11	13	15	17	19	22	24	26	28									
10				3	4	5	6	7	8	9	10	12	14	16	17	19	21	22	24	26	28	29					
15					3	3	4	5	5	6	7	8	9	10	12	13	14	15	16	17	18	20	21	22	23	28	30

Δp min. 30 – 150 l/h = 15 kPa
Δp min. 150 – 300 l/h = 20 kPa

We reserve the right to introduce technical alterations without previous notice.

IMI Hydronic Engineering

IMI Hydronic Engineering Deutschland GmbH • Völlinghauser Weg • DE 59597 Erwitte
Tel.: +49 (0)2943 891-0 • www.imi-hydronic.com