IMI HEIMEIER

Multibox AFC

Floor Heating Controller

Flush-mounted individual room control with automatic flow limitation for floor heating systems

Engineering GREAT Solutions

IMI Hydronic Engineering

Multibox AFC

guarantee the requested flow is not exceeded. Equalization in the event of out-of-true installation, offsetting up to 6° on each side. Cover with concealed screw fastening. Flexible fitting for all wall structures, 30 mm depth compensation.

Key features

- **Integrated flow limiter Eliminates over flows**
- **Simple adjustment of the flow to various heating loads**
- **For out-of-true installation offsetting up to 6° on each side**
- **Adjustable fitting for all wall structures 30 mm depth compensation**

Technical description

Applications:
Floor heating systems, wall heating systems, combined floor/radiator heating systems

Functions:
Multibox AFC K:
Individual room temperature control,
Automatic flow limiting,
Shut-off,
Venting

Multibox AFC RTL:
Maximum limitation of the return temperature,
Automatic flow limiting,
Shut-off,
Venting

Multibox AFC K-RTL:
Individual room temperature control,
Maximum limitation of the return temperature,
Automatic flow limiting,
Shut-off

Dimensions:
Valve body DN 15. The flush box has an overall depth of 60 mm.
Flexible mounting thanks to variable spacing between flush box and cover of up to 30 mm.
The cover can compensate for slanted mounting of the flush box of up to 6° on each side.
See also Dimensions.

Pressure class:
PN 10

Setting range:
Thermostatic head K: 6°C to 28°C
Return temperature limiter RTL: 0°C to 50°C

Temperature:
Max. working temperature: 90°C
Min. working temperature: 2°C
For all Multibox models, ensure that the system supply temperature is suitable for setting up the floor heating system.
See also Information!

Flow range:
The flow can be stepless pre-set within the range: 30-200 l/h.
Delivery setting 200 l/h.

Differential pressure (ΔpV):
Max. differential pressure: 60 kPa
Min. differential pressure:
30 – 140 l/h = 15 kPa
140 – 200 l/h = 20 kPa

Material:
Valve body: Corrosion resistant Gunmetal
O-rings: EPDM rubber
Valve disc: EPDM rubber
Return spring: Stainless steel
Valve insert: Brass, PPS (polyphenylsulphide)
Spindle: Niro-steel spindle with double O-ring sealing. The outer O-ring can be replaced under pressure.
Plastic parts of ABS and PA.
Sensor element: Thermostatic head K with liquid filled sensor. Return temperature limiter (RTL) filled with an expansible medium.

Surface treatment:
Cover and visible graduation cap in white RAL 9016.

Marking:
TAH, flow direction arrows, II-Designation.

Pipe connection:
Pipe-side G 3/4 adaptor with cone suitable for compression fittings for plastic, copper, precision steel and multi-layer pipe.

Construction

Multibox AFC K **Multibox AFC RTL** **Multibox AFC K-RTL**

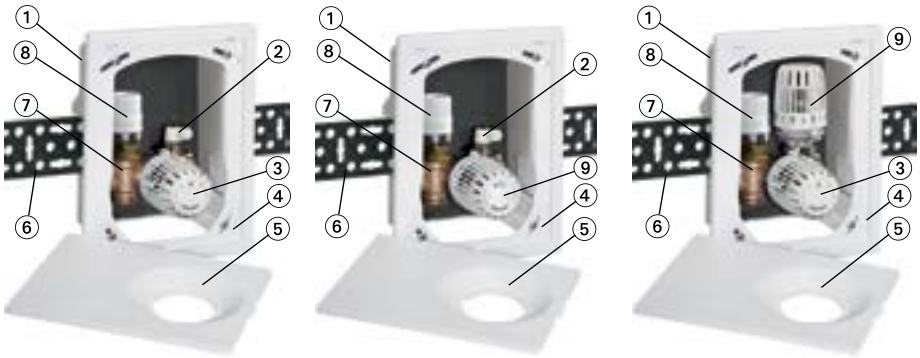

1. Flush box
2. Venting valve
3. Thermostatic head K
4. Frame
5. Cover plate
6. Fixing bar
7. Valve chamber of corrosion resistant gunmetal
8. Flow limiter
9. Return temperature limiter (RTL)

Applications

Multibox AFC K
Multibox AFC K is used for the individual room temperature control of, for instance, floor heating systems in association with low temperature heating systems. Multibox AFC K is also used in wall heating systems.

Multibox AFC RTL
Multibox AFC RTL is used for maximum limitation of the return temperature with, for instance, combined floor/radiator heating systems for temperature control of floor areas. Only the return temperature is controlled.

Multibox AFC K-RTL
Multibox AFC K-RTL is used for the individual room temperature control and maximum limitation of the return temperature with, for instance, combined floor/ radiator heating systems. Multibox AFC K-RTL is also used in wall heating systems.
With all Multibox AFCs, the maximum necessary flow to the individual heating circuits is set directly on the flow limiter, thereby performing automatic flow limitation in a single turn. The adjusted flow will never be exceeded. Even if there is an oversupply of pressure due to load changes in the system - for example other valves closing or during morning start up, the flow will automatically be adjusted to the set value.

In the case of combined floor-radiator heating systems, the following valves with automatic flow limitation (AFC) should be used on the terminal unit together with a Multibox AFC:

- A-exact thermostat valve substructures,
- Multilux 4 A - Set for bathroom hot-water radiators and valve radiators.

Sample application

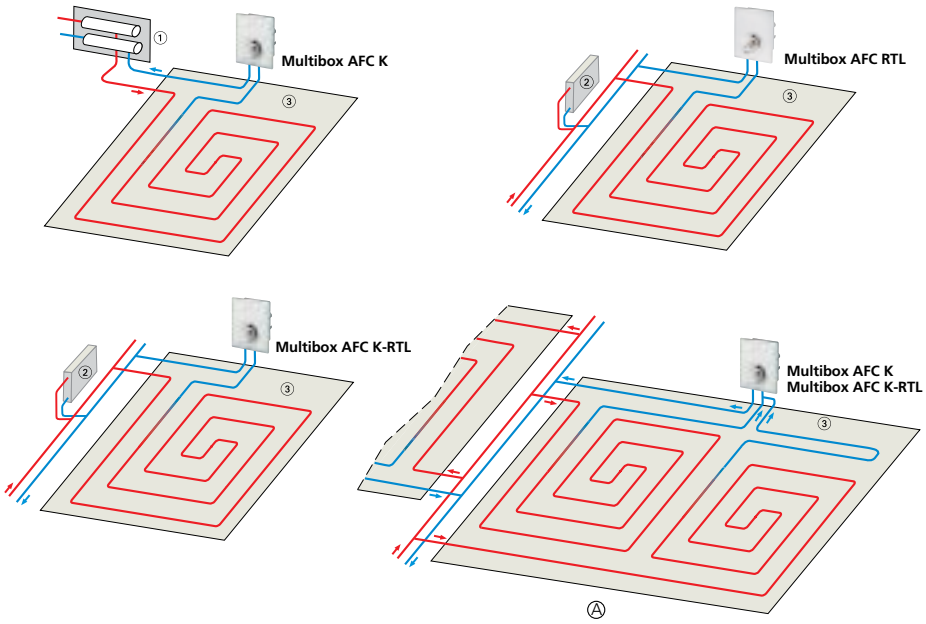

1. Manifold
2. Radiator with A-exact
3. Floor heating area

A. Floor heating without central manifold with e.g. two equally long heating circuits per room and Multibox (see Planning Information).

Function

Multibox AFC K

From the control aspect, the thermostatic valve integrated in Multibox AFC K is a constant proportional controller (P-controller) without any auxiliary power. It does not need any electrical connection or other outside power source.

The change of the room air temperature (controlled variable) is proportional to the change of the valve lift (correcting variable). A rise in the room air temperature e.g. from the sun's rays, results in an expansion of the liquid in the temperature sensor and it acts on the bellows.

By means of the valve spindle, this cuts back on the supply of water in the floor heating circuit. The procedure is reversed given a falling room air temperature.
At the flow controller, the adjusted flow [l/h] will never be exceeded. Even if there is an oversupply of pressure due to load changes in the system - for example other valves closing or during morning start up - Multibox AFC K will guarantee the requested flow.

Multibox AFC RTL

From the control aspect, the return temperature limiter integrated in Multibox AFC RTL is a constant proportional controller (P-controller) without any auxiliary power. It does not need any electrical connection or other outside power source.

The temperature change of the fluid flowing through (controlled variable) is proportional to the change of the valve lift (correcting variable) and is transferred to the sensor by means of thermal conduction. Any rise in the return temperature due to, for instance, to lowered heating output of the floor heating system as a result of outside thermal effects causes the substance in the temperature sensor to expand and act on the diaphragm plunger. By means of the valve spindle, this cuts back on the supply of water in the floor heating circuit. The procedure is reversed given a falling fluid temperature.

The valve opens when the set limiting figure is exceeded.
At the flow controller, the adjusted flow [l/h] will never be exceeded. Even if there is an oversupply of pressure due to load changes in the system - for example other valves closing or during morning start up - Multibox AFC RTL will guarantee the requested flow.

Multibox AFC K-RTL

From the control aspect, the thermostatic valve integrated in Multibox AFC K-RTL is a constant proportional controller (P-controller) without any auxiliary power. It does not need any electrical connection or other outside power source.

The change of the room air temperature (controlled variable) is proportional to the change of the valve lift (correcting variable). A rise in the room air temperature e.g. from the sun's rays, results in an expansion of the liquid in the temperature sensor of the thermostatic head and it acts on the bellows. By means of the valve spindle, this cuts back on the supply of water in the floor heating circuit. The procedure is reversed given a falling room air temperature.

Multibox AFC K-RTL is additionally provided with a return temperature limiter (RTL) which stops the set return temperature from being exceeded. The valve opens when the set limiting figure is exceeded.
At the flow controller, the adjusted flow [l/h] will never be exceeded. Even if there is an oversupply of pressure due to load changes in the system - for example other valves closing or during morning start up - Multibox AFC K-RTL will guarantee the requested flow.

Temperature setting

Thermostatic head K

Cue number	*	1	)	2	3	4	5
Room temperature [°C]	6	12	14	16	20	24	28

Return temperature limiter (RTL)

Cue number	0	1	2	3	4	5
Return temperature [°C]	0	10	20	30	40	50

(Opening temperature)

Setting table

Setting values with different heating performances and system differential temperatures

Q Watt	200	250	300	400	500	600	700	800	900	1000	1200	1400	1600	1800	2000	2200	2400	2600	2800	3000	3200	3400
Δt [K]	l/h																					
5	35	44	53	70	88	105	123	140	158	175												
8			33	44	55	66	77	88	99	110	132	153	175	197								
10				35	44	53	61	70	79	88	105	123	140	158	175	193						
15					30	35	41	47	53	58	70	82	94	105	117	129	140	152	164	175	187	199

Q = Heating performance
Δt = System differential temperature
Δp = Differential pressure

Δp min. 30 - 140 l/h = 15 kPa
Δp min. 140 - 200 l/h = 20 kPa

Sample:
Q = 1000 W, Δt = 8 K
Setting value: 110 l/h

Diagram

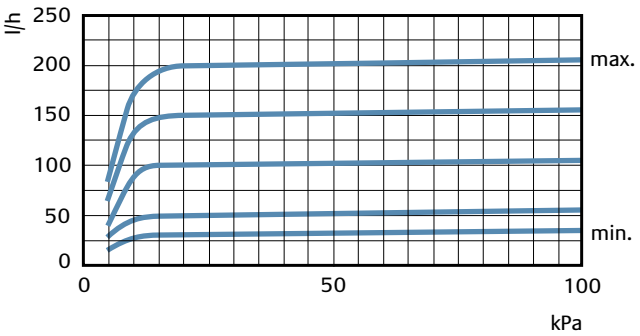

Pipe Guide Channel

PU pipe guide channel for easy mounting of all IMI Heimeier Multibox models and for convenient pipe-valve attachment. Mounting, for instance, in wall gaps or in front wall plumbing.

Dimensions: 180 mm x 575 mm x 70 mm (B x H x D).
Also see Accessories.

Examples of mounting


1.


2.

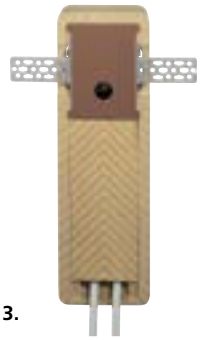
3.

Information

Planning notes

- **For all Multibox models, ensure that the system supply temperature is suitable for setting up the floor heating system.**
- **All Multibox models are to be connected to the return pipe at the end of the floor heating circuit. Heed direction of flow (see Examples of use).**
- Depending on piping pressure loss, all Multibox models are suitable for heating areas up to approx. 20 m².
- The length of 12 mm internal diameter pipe in any heating circuit should not exeed 100 m.
- With heating areas >20 m² and/or pipe lengths >100 m, a T-piece, for instance, should be used to connect two equally long heating circuits to the Multibox. (see Examples of use).
- To ensure low-noise system operation, differential pressure over the valve should not exceed 0.6 bar.
- The floor heating pipe is to be laid spirally in the flooring screed (see Examples of use).
- The set value of the RTL should not be below ambient temperature - otherwise it will not open.

Thermal fluid

To stop any damage and scale in hot water heating systems, the composition of the thermal fluid is to conform to VDI Directive 2035. For industrial and longdistance energy systems, see applicable codes VdTÜV and 1466/AGFW FW 510.
Mineral oil in the thermal fluid and/or all kinds of lubricants containing mineral oil lead to considerable swelling and, in most cases, to the failure of EPDM seals.
When using nitrite-free antifreeze and anti-corrosive based on ethylene glycol, technical advice – especially on additive concentration – is to be taken from the anti-freeze/anti-corrosive manufacturer's documentation.

Functional heating

Carry out functional heating of heating screed conforming to standards in keeping with EN 1264-4.
Earliest start for functional heating:
– Cement screed: 21 days after laying
– Anhydrite screed 7 days after laying
Begin 20 °C - 25 °C flow temperature and maintain for 3 days. Then set maximum design temperature and maintain for 4 days. Flow temperature can be regulated by controlling the heat generator. Turn the protective cap anticlockwise to open valve or turn RTL head to Position 5.

Refer to the screed manufacturer's information!
Do not exceed maximum floor temperature at the heating pipes:
– Cement and anhydrite screed: 55 °C
– Poured asphalt screed: 45 °C
– according to screed manufacturer's technical advice!

Articles

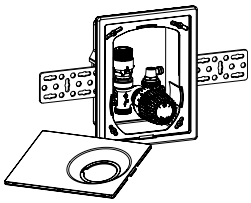

Multibox AFC K
with thermostatic valve

Colour	EAN	Article No
Cover and thermostatic head K white RAL 9016	4024052902415	9318-00.800

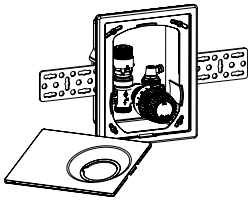

Multibox AFC RTL
with return temperature limiter (RTL)

Colour	EAN	Article No
Cover and RTL thermostatic head white RAL 9016	4024052902514	9319-00.800

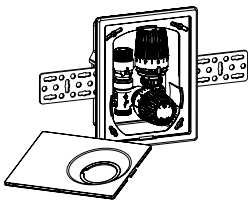

Multibox AFC K-RTL
with thermostatic valve and return temperature limiter (RTL)

Colour	EAN	Article No
Cover and thermostatic head K white RAL 9016	4024052902316	9317-00.800

Accessories

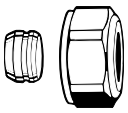

Compression fitting
for copper or precision steel pipe.
Brass nickel-plated.
With a pipe wall thickness of 0.8-1 mm insert supporting sleeves. Heed pipe manufacturer's technical advice.

Ø Pipe	EAN	Article No
12	4024052214211	3831-12.351
15	4024052214617	3831-15.351
16	4024052214914	3831-16.351
18	4024052215218	3831-18.351

Support sleeve
for copper or precision steel pipe with a 1 mm wall thickness.
Brass.

Ø Pipe	L	EAN	Article No
12	25,0	4024052127016	1300-12.170
15	26,0	4024052127917	1300-15.170
16	26,3	4024052128419	1300-16.170
18	26,8	4024052128815	1300-18.170

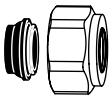

Compression fitting
for copper or precision steel pipe.
Brass nickel-plated.
Soft sealed.

Ø Pipe	EAN	Article No
15	4024052515851	1313-15.351
18	4024052516056	1313-18.351

Compression fitting
for plastic pipe.
Brass nickel-plated.

Ø Pipe	EAN	Article No
14x2	4024052134618	1311-14.351
16x2	4024052134816	1311-16.351
17x2	4024052134915	1311-17.351
18x2	4024052135110	1311-18.351
20x2	4024052135318	1311-20.351

Compression fitting
for multi-layer pipes.
Nickel-plated brass.

Ø Pipe	EAN	Article No
16x2	4024052137312	1331-16.351

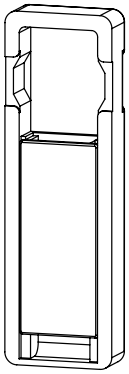

Pipe guide channel
made of PU, for easy mounting of all Multibox/Multibox AFC models and convenient pipe-valve attachment.
180 mm x 575 mm x 70 mm (B x H x D).

	EAN	Article No
	4024052511310	9300-00.553

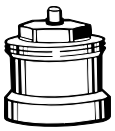

Spindle extension for K thermostatic head with Multibox AFC K and Multibox AFC K-RTL
when maximum installation depth exceeded.

L	EAN	Article No
Brass nickel-plated		
20	4024052528813	2201-20.700
30	4024052528912	2201-30.700
Plastic, black		
15	4024052553310	2001-15.700
30	4024052165018	2002-30.700

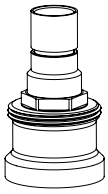

Spindle extension for RTL thermostatic head with Multibox AFC RTL

when maximum installation depth exceeded.
Brass nickel-plated.

L	EAN	Article No
20	4024052500215	9153-20.700

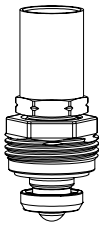

Replacement insert for Multibox AFC RTL

for valve bodies with II-marking.

	EAN	Article No
	4024052909711	1305-02.300

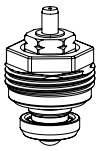

Replacement insert for Multibox AFC K and Multibox AFC K-RTL

for valve bodies with II-marking.

	EAN	Article No
	4024052132614	1302-02.300

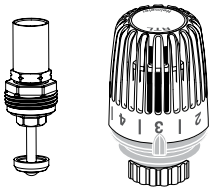

RTL insert and RTL thermostatic head

specially for converting Multibox K/ Multibox AFC K into Multibox K-RTL/ Multibox AFC K-RTL.

	EAN	Article No
RTL insert	4024052497812	9303-00.300
RTL thermostatic head	4024052275311	6500-00.500

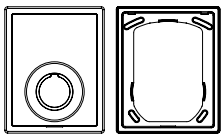

Frame and cover plate

Replacement for Multibox K/Multibox AFC K, Multibox RTL/Multibox AFC RTL and Multibox K-RTL/Multibox AFC K-RTL.

Colour	EAN	Article No
White RAL 9016	4024052489671	9300-00.800

Dimensions

Multibox AFC K

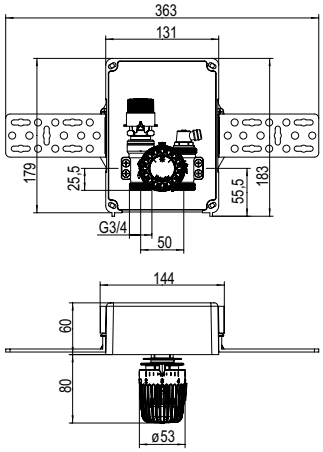

Multibox AFC RTL

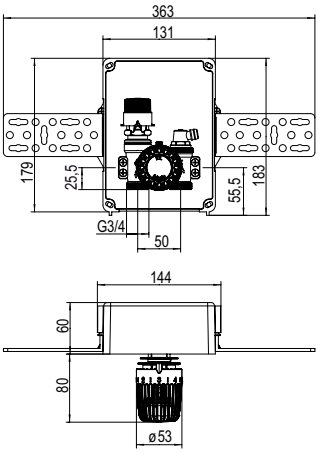

Multibox AFC K-RTL

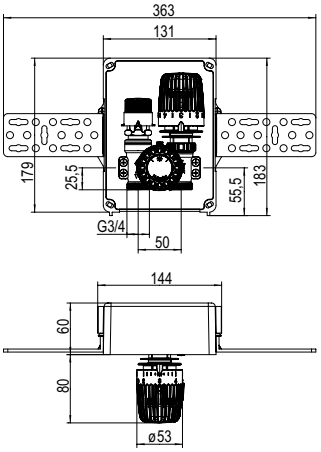

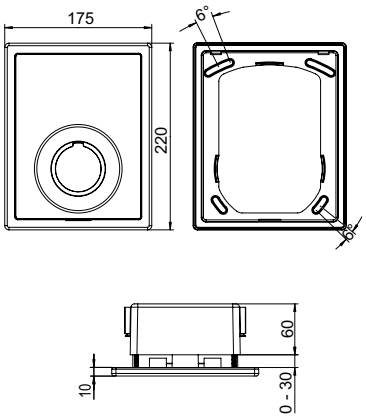

IMI Hydronic Engineering

3620-18.483 10.2015

9317-00.480 044959 TEILE
12.2014

IMI HEIMEIER

Multibox AFC

Multibox AFC RTL (9319-00.800)

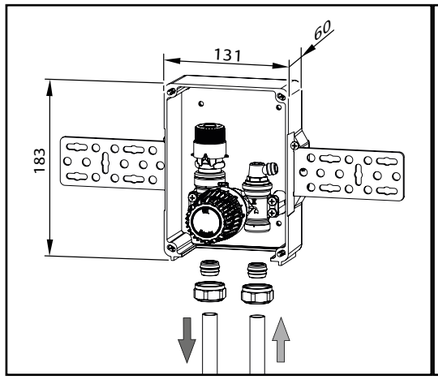

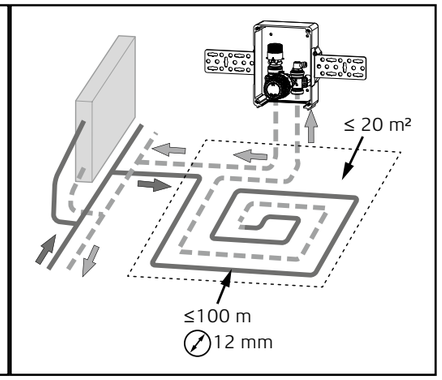

Multibox AFC K (9318-00.800)

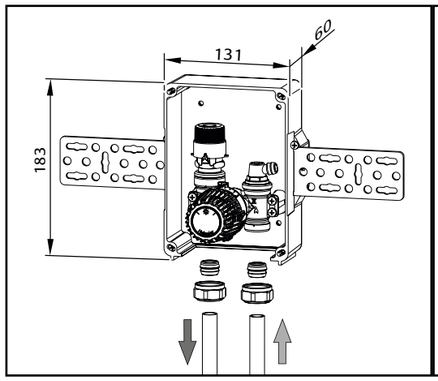

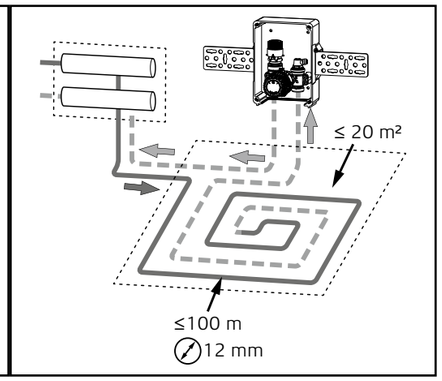

Multibox AFC K-RTL (9317-00.800)

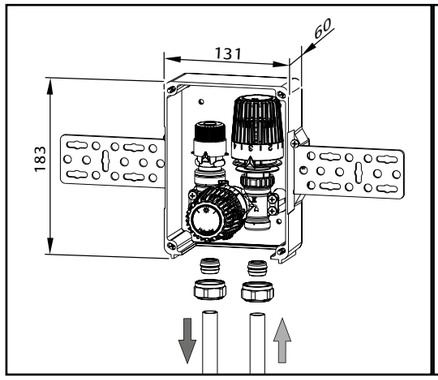

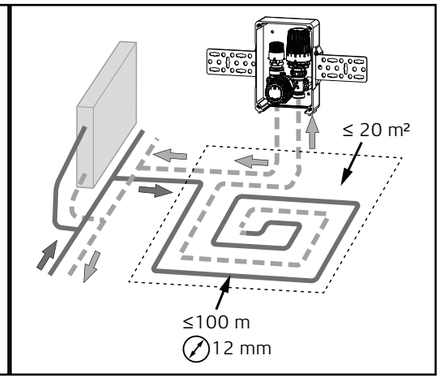

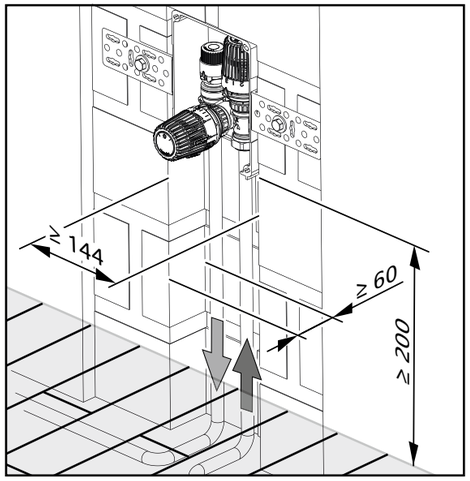

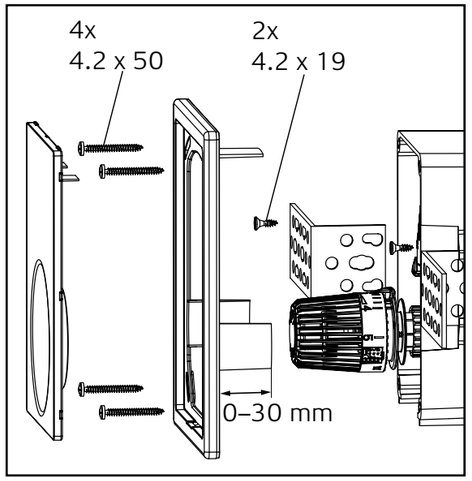

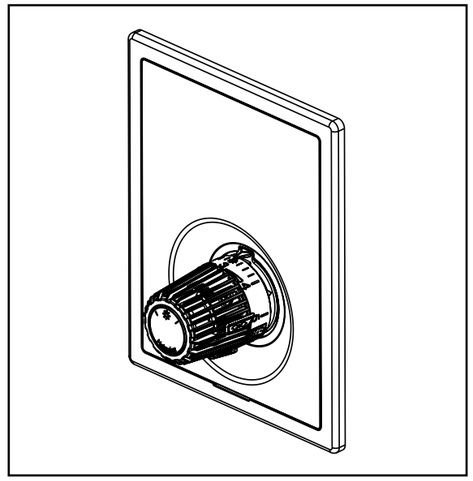

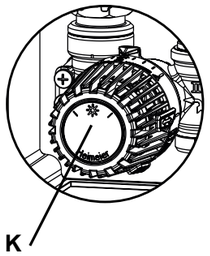

	❄	1	☽	2	✲ 3	4	5
[° C]	6	12	14	16	20	24	28

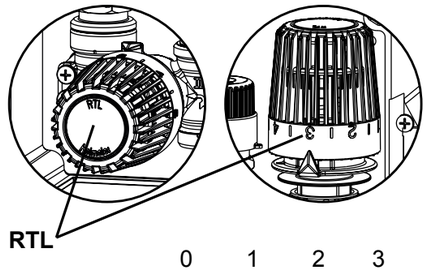

	0	1	2	3	4	5
[° C]	0	10	20	30	40	50

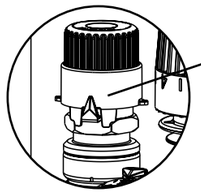

Watt	200	250	300	400	500	600	700	800	900	1000	1200	1400	1600	1800	2000	2200	2400	2600	2800	3000	3200	3400
Δt [K]	l/h																					
5	35	44	53	70	88	105	123	140	158	175												
8			33	44	55	66	77	88	99	110	132	153	175	197								
10				35	44	53	61	70	79	88	105	123	140	158	175	193						
15					30	35	41	47	53	58	70	82	94	105	117	129	140	152	164	175	187	199

Δp min. = 20 kPa

IMI Hydronic Engineering

IMI Hydronic Engineering Deutschland GmbH · Postfach 1124 · 59592 Erwitte
Tel.: +49 (0)2943 891-0 · www.imi-hydronic.com

IMI HEIMEIER

Multibox AFC

Funktionsheizen

Funktionsheizen bei Normgerechten Heizestrich entsprechend EN 1264-4 durchführen.
Frühester Beginn des Funktionsheizens:
– Zementestrich: 21 Tage nach Verlegung
– Anhydritestrich: 7 Tage nach Verlegung
Mit Vorlauftemperatur zwischen 20 °C und 25 °C beginnen und diese 3 Tage aufrechterhalten. Anschließend maximale Auslegungstemperatur einstellen und diese 4 Tage halten. Die Vorlauftemperatur ist dabei über die Steuerung des Wärmeerzeugers zu regeln. Ventil durch linksdrehen der Bauschutzkappe öffnen und RTL-Kopf auf Stellung 5 drehen.
Hinweise des Estrichherstellers beachten!
Maximale Estrichtemperatur im Bereich der Heizrohre nicht überschreiten:
– Zement- und Anhydritestrich: 55 °C
– Gussasphaltestrich: 45 °C
– nach Angabe des Estrichherstellers!

Functional heating

Carry out functional heating at the heating mark conforming to standards in keeping with EN 1264-4.
Earliest start for functional heating:
– Cement floor: 21 days after laying
– Anhydrite floor: 7 days after laying
Begin at supply temperature of 20°C - 25°C and maintain for 3 days. Then adjust maximum design temperature and maintain for 4 days. The supply temperature can be regulated by controlling the boiler. Turn the protective cap anticlockwise to open valve and turn RTL head to Position 5.
Refer to the information of the cement floor manufacturer!
Do not exceed maximum cement floor temperature at the heating pipes:
– Cement and anhydrite floor: 55 °C
– Poured asphalt floor: 45°C
– in line with particulars of the cement floor manufacturer!

Chauffage fonctionnel

Exécuter le chauffage fonctionnel dans le respect des normes sur les chapes chauffantes EN 1264-4.
Début du chauffage fonctionnel au plus tôt :
– Chape de ciment : 21 jours après la pose
– Chape anhydrite 7 jours après la pose
Commencer avec une température de canalisation montante entre 20 et 25 °C et la maintenir pendant 3 jours. Régler ensuite la température de pose maximale et la maintenir pendant 4 jours. La température de la canalisation montante sera réglée à l'aide de la commande du générateur thermique. Ouvrir le robinet en tournant le capuchon de protection vers la gauche et en tournant la tête RTL en position 5. Observer les indications du fabricant de la chape.
Ne pas dépasser la température de chape maximale dans la zone des tuyaux de chauffage :
– Chape ciment et anhydride : 55 °C
– Chape d'asphalte coulé : 45 °C
– Selon les indications du fabricant de la chape.

Begin van het verwarmingsbedrijf

Start het verwarmingsbedrijf bij normgerechte verwarmingsestrik conform EN 1264-4.
Vroegst mogelijk begin van het verwarmingsbedrijf
– Cementestrik: 21 na het leggen
– Anhydrietestrik: 7 na het leggen
Begin met een voorlooptemperatuur van 20 °C t/m 25 °C en handhaaf deze 3 dagen. Stel vervolgens de maximale uitvoeringstemperatuur in en handhaaf deze 4 dagen. De voorlooptemperatuur moet daarbij worden geregeld via de besturing van de warmtegenerator. Open de klep door het naar links draaien van de montagekap en draai de RTL-kop naar stand 5.
Let op de aanwijzingen van de estrikfabrikant!
Overschrijd nooit de maximale estriktemperatuur in het bereik van de verwarmingsbuizen:
– cement- en anhydrietestrik: 55 °C
– gietasfaltestrik: 45 °C
– volgens de gegevens van de estrikfabrikant!

Riscaldamento funzionale

Eseguire il riscaldamento funzionale per pavimento continuo riscaldato conforme alle norme secondo le EN 1264-4.
Inizio del riscaldamento funzionale:
– Pavimento continuo di cemento: 21 giorni dopo la posa
– Pavimento continuo di anidrite: 7 giorni dopo la posa
Iniziare con una temperatura di mandata compresa tra 20 °C e 25 °C e mantenerla costante per 3 giorni. Regolare quindi sulla temperatura massima di dimensionamento e mantenerla costante per 4 giorni. La temperatura di mandata deve essere regolata con il controllore del generatore di calore. Aprire la valvola ruotando il cappuccio protettivo in senso antiorario e portare la testina RTL in posizione 5.
Osservare le avvertenze del costruttore del pavimento continuo!
Non superare la temperatura massima del pavimento continuo nel settore della zona di riscaldamento:
– Pavimento continuo di cemento e di anidrite: 55 °C
– Pavimento continuo di mastice di asfalto: 45 °C
– Secondo le istruzioni del costruttore del pavimento continuo.

Calefacción funcional

Realice la calefacción funcional en caso de capa de acabado de calefacción de acuerdo con la norma EN 1264-4.
Inicio más pronto de la calefacción funcional:
– Capa de acabado de cemento: 21 días después de la colocación
– Capa de acabado de anhidrita: 7 días después de la colocación
Empiece con una temperatura de avance entre 20 °C y 25 °C y mantenga ésta durante 3 días. Después ajuste la máxima temperatura de colocación y mantenga ésta durante 4 días. La tempreratura debe ser regulada a través del generador térmico. Gire el cabezal RTL a la cifra característica 5. Preste atención a las indicaciones del fabricante de la capa de acabado.
No sobrepase la temperatura máxima de la capa de acabado en el sector de los tubos de calefacción:
– Capa de acabado de cemento y de anhidrita: 55 °C
– Capa de acabado de asfalto fundido: 45 °C
– Según las indicaciones del fabricante de la capa de acabado !

Функциональное отопление

Осуществите функциональное отопление в случае отвечающей стандарту стяжки напольного отопления в соответствии с EN 1264-4.
Самое ранее начало функционального отопления:
– Цементный бесшовный пол: через 21 день после укладки.
– Ангидритовый бесшовный пол: через 7 день после укладки.
Начните с температуры в подводящей линии в пределах от 20 °C до 25 °C и выдерживайте эту температуру в течение 3 дней. Затем установите максимальную расчетную температуру и поддерживайте ее в течение 4 дней. При этом температуру в подводящей линии регулируют с помощью системы управления теплового агрегата. Откройте вентиль путем поворота защитной крышки против часовой стрелки и поверните головку RTL в положение 5.
Выполняйте указания изготовителя бесшовного пола!
Не превышайте максимально допустимую температуру бесшовного пола в области нагревательной трубы:
– цементный и ангидритовый бесшовный пол: 55 °C
– бесшовный пол из литого асфальта: 45 °C
– в соответствии с данными изготовителя бесшовного пола!

Ogrzewanie funkcyjne

Ogrzewanie funkcyjne dla zgodnego z normą jastrychu dla ogrzewania wykonać zgodnie z EN 1264-4.
Najwcześniejszy dopuszczalny początek ogrzewania funkcyjnego:
– jastrych cementowy: 21 dni po ułożeniu
– jastrych anhydrytowy: 7 dni po ułożeniu
Rozpocząć stosując temperaturę na dopływie w zakresie od 20 °C do 25 °C i utrzymać ją przez 3 dni. Następnie ustawić na maksymalną temperaturę projektową i utrzymać ją przez 4 dni. Regulację temperatury na dopływie prowadzić na sterowaniu wytwornika ciepła. Obracając w lewo ochronną pokrywę montażową otworzyć zawór i przekręcić głowicę RTL na położenie 5.
Przestrzegać wskazówek producenta jastrychu!
Nie przekraczać maksymalnej temperatury jastrychu w obszarze rur grzewczych:
– jastrych cementowy i anhydrytowy: 55 °C
– jastrych wylewany asfaltowy: 45 °C
– według informacji producenta jastrychu!

Funkční vytápění

Vytvořit funkční vytápění u potěrů pro vytápění, které splňují požadavky EN 1264-4.
Začátek funkčního vytápění:
– Cementový potěr: 21 dní po položení
– Anhydritový potěr: 7 dní po položení
Začít s výtlakovou teplotou mezi 20 °C a 25 °C a tu udržovat po 3 dny. Potom nastavit maximální dimenzovanou teplotu a tu udržovat 4 dny. Výtlaková teplota se přitom řídí ovládáním zdroje tepla. Ventil otevřít otáčením ochranného krytu doleva a RTL-hlavu otočit na pozici 5.
Dodržovat pokyny od výrobce potěru!
Maximální teplotu potěru v oblasti topných trubek nepřekročit:
– Cementový a anhydritový potěr: 55 °C
– Potěr litého asfaltu: 45 °C
– Podle údajů výrobce potěru!

Funkčné vykurovanie

Vytvoriť funkčné vykurovanie u poterov pre vykurovanie, ktoré spĺňajú požiadavky podľa EN 1264-4.
Začiatok funkčného vykurovania:
– Cementový poter: 21 dní po položení
– Anhydritový poter: 7 dní po položení
Kúrenie spustiť s výtlakovou teplotou medzi 20 °C a 25 °C a tu po 3 dni udržiavať. Potom nastaviť maximálnu dimenzovanú teplotu a tu udržiavať 4 dni. Výtlaková teplota sa pritom riadí cez ovládanie zdroja tepla. Ventil otočiť otáčaním ochranného krytu doľava a RTL-hlavu otočiť na pozíciu 5.
Rešpektovať pokyny výrobcu poteru!
Maximálnu teplotu poteru v oblasti vykurovacích rúrok neprekročiť:
– Cementový a anhydritový poter: 55 °C
– Poter liatého asfaltu: 45 °C
– Podľa údajov výrobcu poteru!

Üzemi fűtés

Az üzemi fűtést szabvány szerinti padlófűtés esetén az EN 1264-4 szerint kell végezni.
Az üzemi fűtés legkorábbi kezdete:
– Betonpadló: 21 nappal a lefektetés után
– Anhidrit padló: 7 nappal a lefektetés után
A bemelegítő fűtést kezdjék 20 °C és 25 °C közötti hőmérséklettel, és ezt tartsák 3 napon keresztül. Ezután állítsák be a maximális kiépítési hőmérsékletet, és ezt tartsák 4 napon keresztül. Eközben a bemelegítő hőmérsékletet szabályozzák a hőfejlesztő vezérlése fölé. A védőfedelet balra forgatva nyissák meg a szelepet, és forgassák az RTL fejet az 5-ös jelzőszámra.
Kövessék a padlóágyazat gyártójának utasításait!
A maximális padlóhőmérsékletet a fűtőcsövek körzetében nem szabad túllépni:
– beton- és anhidritpadló: 55 °C,
– öntött aszfaltpadló: 45 °C,
– a padlógyártó utasításai szerint!

Grijanje za ispitivanja funkcije

Izvršiti grijanje za ispitivanja funkcije koja odgovara normi košuljice poda, shodno EN 1264-4.
Najraniji početak grijanja za ispitivanje funkcije:
– Cementna košuljica poda: 21 dan nakon postavljanja
– Anhidritna košuljica poda: 7 dana nakon postavljanja
Početi s polaznom temperaturom izmedju 20 °C i 25 °C i tu temperaturu držati 3 dana. Nakon toga, podesiti maksimalnu temperaturu, koja je predvidjena, i nju držati 4 dana. Regulirati polaznu temperaturu preko komandnog uredjaja toplotnog izvora. Ventil otvoriti, okretanjem zaštitne kapice na lijevo i RTL-gumb okrenuti na poziciju 5.
Voditi računa o uputama proizvodjača košuljice poda!
Ne prekoračiti maksimalnu temperaturu košuljice poda gdje se nalaze cijevi za grijanje:
– Cementna i anhidritna košuljica poda: 55 °C
– Košuljica poda od lijevanog asfalta: 45 °C
– prema podatcima proizvodjača poda!

Δοκιμαστική λειτουργία θέρμανσης

Διεξάγετε δοκιμαστική λειτουργία της θέρμανσης, όπως ορίζει το πρότυπο για κονίες θέρμανσης EN 1264-4.
Νωρίτερη δυνατή έναρξη της δοκιμαστικής λειτουργίας θέρμανσης:
- Τσιμεντοκονία: 21 ημέρες μετά την τοποθέτηση
- Κονία ανυδρίτη: 7 ημέρες μετά την τοποθέτηση
Ξεκινήστε με μία προκαταρκτική θερμοκρασία μεταξύ 20 °C και 25 °C και διατηρήστε την για 3 ημέρες. Στη συνέχεια ρυθμίστε τη μέγιστη προβλεπόμενη θερμοκρασία και διατηρήστε την για 4 ημέρες. Η προκαταρκτική θερμοκρασία πρέπει να ρυθμίζεται μέσω του συστήματος έλεγχου του θερμαντήρα. Ανοίξτε τη βαλβίδα περιστρέφοντας το προστατευτικό κάλυμμα προς τα αριστερά και γυρίστε την κεφαλή RTL στη θέση 5.
Τηρείτε τις οδηγίες του κατασκευαστή της κονίας.
Δεν επιτρέπεται η υπέρβαση της μέγιστης θερμοκρασίας κονίας στην περιοχή των σωλήνων θέρμανσης:
- Τσιμεντοκονία και κονία ανυδρίτη: 55 °C
- Χυτό ασφαλτικό σκυρόδεμα: 45 °C
- Σύμφωνα με τα στοιχεία του κατασκευαστή της κονίας!

暖房開始

暖房開始の基準に対応する暖房床スラブを使用した場合の暖房開始。

暖房開始の最早時点
– セメント床スラブ：塗布後 21 日
– 無水石膏床スラブ：塗布後 7 日
先行温度はまず 20°C から 25°C 間の温度で開始し、この温度を 3 日間保ちます。その後、指定最高温度に調整し、この温度を 4 日間保ちます。先行温度は暖房装置の制御装置を使って調整します。保護キャップを左回転し、バルブを開き RTL ヘッドを 5 の位置に回します。
床スラブ材製造会社の説明に注意をはらってください！
床スラブ材の指定する最高温度を暖房パイプの近くで絶対超えないこと：
– セメントおよび無水石膏の床スラブ材：55 °C
– 注入アスファルト床スラブ材：45 °C
– 床スラブ材の製造会社の指示に従うこと

Notkunarupphitun

Framkvæmið notkunarupphitun hjá stöðluðu hitunarundirgólfi samkvæmt EN 1264-4.
Fyrsta byrjun notkunarupphitunarinnar:
– Sementundirgólf: 21 daga eftir lagningu
– Anhydritundirgólf: 7 daga eftir lagningu
Byrjið með framrásarhitastigi á milli 20 °C og 25 °C og haldið því uppi í 3 daga. Stillið síðan inn hæsta tilætlaða hitastig og haldið því í 4 daga. Við þetta á að tempra framrásarhitastigið með stýringu á hitagjafa. Opnið ventil með því að snúa hlífðarhettunni til vinstri og snúið hitanema á stillingu 5.
Athugið fyrirmæli framleiðandans fyrir undirgólf!
Farið ekki yfir hæstu hitastig undirgólfs á svæði hitunarröranna:
– Sement- og anhydritundirgólf: 55 °C
– Steypuasfaltundirgólf: 45 °C
– samkvæmt fyrirmælum framleiðanda undirgólfs!

Funktionsuppvärmning

Genomför en funktionsuppvärmning vid normenligt värmemassagolv enligt EN 1264-4.
Tidigaste början av funktionsuppvärmningen:
– Cement-massagolv: 21 dagar efter läggningen
– Anhydrit-massagolv: 7 dagar efter läggningen
Börja med en förloppstemperatur på mellan 20 °C och 25 °C och håll denna temperatur i 3 dagar. Ställ sedan in den maximala temperaturen och håll den i 4 dagar. Förloppstemperaturen regleras via värmeaggregatets styrning. Öppna ventilen genom att vrida skyddskåpan åt vänster och ställ RTL-knappen på 5.
Beakta massagolv-tillverkarens uppgifter och anvisningar!
Överskrid inte den maximala massagolv-temperaturen i området kring värmerören:
- Cement- och anhydrit-massagolv: 55 °C
- Gjutasfalt-massagolv: 45 °C
- Enligt massagolv-tillverkarens uppgifter!

Funkcijsko ogrevanje

Funkcijsko ogrevanje izvedite v skladu s standardom EN 1264-4.
Najhitrejši začetek funkcijskega ogrevanja:
- cementni estrih: 21 dni po polaganju
- anhidritni estrih: 7 dni po polaganju
Začnite s temperaturo predteka med 20 °C in 25 °C in jo vzdržujte 3 dni. Nato nastavite največjo temperaturo in jo vzdržujte 4 dni. Temperaturo predteka pri tem uravnavajte preko krmilnika na toplotnem proizvajalcu. Z obračanjem zaščitnega gradbenega pokrova v levo odprite ventil in glavo RTL postavite na položaj 5.
Upoštevajte napotke proizvajalca estriha!
Ne prekoračite največje temperature estriha na območju grelnih cevi:
- cementni in anhidritni estrih: 55 °C
- estrih iz litega asfalta: 45 °C
- Po navodilih proizvajalca estriha!

Încălzirea funcțională

Încălzirea funcțională se realizează la o șapă de încălzire conform normei EN 1264-4.
Începutul încălzirii timpurii funcționale:
– șapă din ciment: la 21 zile după montare
– șapă anhidridă: la 7 zile după montare
Se începe cu temperaturi ale turului cuprinse între 20 °C și 25 °C și se menține timp de 3 zile. La final se reglează temperatura maximă admisă și se menține timp de 4 zile. Temperatura de tur se va regla prin intermediul comenzii generatorului de căldură. Se deschide ventilul prin rotirea către stânga a capacului de protecție pe șantier iar capul RTL se rotește în poziția 5. Se vor respecta indicațiile producătorului șapei!
Nu depășiți temperatura maximă admisă a șapelor în zona țevilor de încălzire:
– șapă de ciment și anhidridă: 55 °C
– șapă asfaltică: 45 °C
– după indicațiile producătorului de șapă!

Funkcinis šildymas

Standartus atitinkančioms šildomoms plūdriosioms grindims, atlikite funkcinį šildymą pagal standarto EN 1264-4 reikalavimus.
Anksčiausia funkcinio šildymo pradžia:
– cemento plūdriosios grindys: po 21 dienos nuo paklojimo
– anhidrito plūdriosios grindys: po 7 dienos nuo paklojimo
Pradėkite nuo paduodamosios linijos temperatūros tarp 20 – 25 °C ir išlaikykite tokią temperatūrą 3 dienas. Tada nustatykite maksimalią išskaičiuotą temperatūrą ir išlaikykite ją 4 dienas. Šiuo atveju paduodamosios linijos temperatūra reguliuojama per šilumos agregato valdymą. Sukdami apsauginį antvožą į kairę atidarykite ventilį ir RTL termostato galvutę pasukite ties atžyma 5.
Laikykitės plūdriųjų grindų gamintojo nuorodų!
Šildymo vamzdžių aplinkoje neviršykite maksimalios leistinos plūdriųjų grindų temperatūros:
– cemento ir anhidrito plūdriosioms grindims: 55 °C
– lieto asfalto plūdriosios grindys: 45 °C
– pagal plūdriųjų grindų gamintojo pateikiamą informaciją!

Pirmā uzsildīšana

Veiciet standartiem atbilstoša apsildāma monolītā grīdas klājuma pirmo uzsildīšanu saskaņā ar EN 1264-4.
Pirmās uzsildīšanas agrākais sākšanas laiks:
- cementa klājums: 21 dienas pēc ieklāšanas
- anhidrīta klājums: 7 dienas pēc ieklāšanas
Sāciet ar turpgaitas temperatūru robežās no 20 °C līdz 25 °C un uzturiet to nemainīgu 3 dienas. Pēc tam iestatiet maksimālo sistēmas temperatūru un uzturiet to 4 dienas. Turpgaitas temperatūra ir jāregulē ar siltuma ģeneratora vadības sistēmu. Pagriežot pa kreisi aizsargvāciņu, atveriet ventili un RTL galvu pagrieziet pozīcijā 5.
Ievērojiet monolītā grīdas klājuma ražotāja norādījumus!
Nepārsniedziet maksimālo monolītā grīdas klājuma temperatūru apsildes cauruļu tuvumā:
- cementa un anhidrīta klājums: 55 °C
- lietā asfalta klājums: 45 °C
- atbilstoši monolītā grīdas klājuma ražotāja norādījumiem!

Funktsionaalne kütmine

Standardile vastava põrandabetooni puhul teostada funktsionaalne kütmine EN 1264-4 kohaselt.
Funktsionaalse kütmise esimest korda sisselülitamine:
– tsementbetoon: 21 päeva pärast paigaldamist
– anhüdriidist põrand: 7 päeva pärast paigaldamist
Alustada pealevoolu temperatuuriga vahemikus 20 °C kuni 25 °C ja hoida seda 3 päeva vältel. Seejärel seadistada maksimaalse ette nähtud temperatuuri peale ja hoida seda 4 päeva vältel. Pealevoolu temperatuuri reguleerida soojustootja juhtimisseadme abil. Avada ventiil kaitsekatet vasakule poole pöörates ja keerata RTL-pea asendisse 5.
Järgida põrandasegu tootja juhiseid!
Maksimaalset põrandasegu temperatuuri küttetorude piirkonnas ei tohi ületada:
– tsemendist ja anhüdriidist põrand: 55 °C
– valuasfaldist põrand: 45 °C
– järgida põranda tootja andmeid!

Функционално отопление

Извършете функционално отопление при оттоварящ на стандартите отоплителна замазка съгласно EN 1264-4.
Най-ранно започване на функционалното отопление:
– Циментова замазка: 21 дена след поставянето
- Анхидридна замазка: 7 дена след поставянето
Започнете с температура на подаващия кръг между 20 °C и 25 °C и я поддържайте 3 дена. След това настройте максималната температура на изпълнението и я поддържайте 4 дни. При това температурата на подаващия кръг трябва да се регулира чрез управлението на производителя на топлина. Отворете вентила чрез въртене наляво на защитната капачка и завъртете RTL главата на позиция 5.
Вземете под внимание указанията на производителя на замазката!
Да не се надхвърля максималната температура на замазката в областта на отоплителните тръби:
- Циментова и анхидридна замазка: 55 °C
- Асфалтова замазка: 45 °C
- съгласно данни на производителя на замазката!

IMI Hydronic Engineering