IMI TA

# DKH 512

**Differential pressure controllers**

Flow and differential pressure controller

Engineering GREAT Solutions

IMI Hydronic Engineering

# DKH 512

The DKH 512 is a flow and differential pressure controller with a wide range of applications. Perfect for use in district heating substations, central heating and air-conditioning systems. Compact, and featuring an electrophoretically painted ductile iron body for optimum rust protection, the DKH 512 also features two inline valves that keep noise to a minimum. A manual shut-off function ensures easy maintenance.

## Key features

> **Inline design**
Inline flow allows high pressure drops without noise.

> **Adjustable flow**
Ensures the design flow.

## Technical description

**Application:**
District heating substations, primary side, as well as in central heating and air-conditioning.
Heating and cooling systems with variable flow.

**Function:**
Differential pressure control over the load and flow control.
Closes at increasing flow or Δp.

**Dimensions:**
DN 15-80

**Pressure class:**
PN 25

**Differential pressure (ΔpV):**
Max. differential pressure: 1600 kPa = 16 bar ($\Delta H_{max}$)
Min. differential pressure:
Low flow (LF): 12 kPa ($\Delta H_{min}$)
Normal flow (NF): 20 kPa ($\Delta H_{min}$)
High flow (HF): 40 kPa ($\Delta H_{min}$)
(Valid for max. position, fully open. Other positions will require lower differential pressure, check with the software TA-Select.)

**Setting range:**
Differential pressure fixed at 15, 40, 60 or 100 kPa.

**Temperature:**
Max. working temperature: 150°C
Min. working temperature: -10°C

**Media:**
Water and neutral fluids, water-glycol mixtures.

**Material:**
Valve body: Ductile iron EN-GJS-400
Diaphragms and gaskets: EPDM

**Surface treatment:**
Electrophoretic painting.

**Marking:**
TA, DN, PN, Kvs, Δp, Material and flow direction arrow.

**Threads:**
DN 15-50: According to ISO 228.

**Flanges:**
DN 15-50 (optional): According to EN-1092-2:1997, type 16.
DN 65-80: According to EN-1092-2:1997, type 21.

## Operating function

Flow (1) and differential pressure (2) controller are integrated in series in a common compact housing. The differential pressure controller also acts as a control throttle for flow control and as a stop valve.
The pressure upstream of the consumer acts through an external impulse pipe (Δp+) to the inlet side of the differential pressure diaphragm (3) and attempts to close the valve. The pressure downstream of the consumer (upstream of the valve) acts through an internal impulse boring (Δp-) to the outlet side of the differential pressure diaphragm and attempts to open the valve together with the force of the differential pressure control spring (4). As long as the forces on the diaphragm are in balance, the valve stands still. If the differential pressure increases, the valve closes until a new equilibrium is reached and vice versa.
Pressure drop on the differential pressure valve acts through internal impulse borings (q+, q-) to the flow control diaphragm (5) and attempts to close the valve against the force of the flow control spring (6). As long as the forces on the diaphragm are in balance, the valve stands still. If the flow increases, the valve closes until a new equilibrium is reached and vice versa.

**DN 15-50**

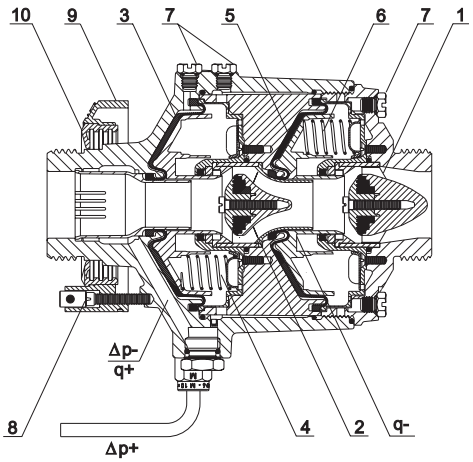


**DN 65-80**

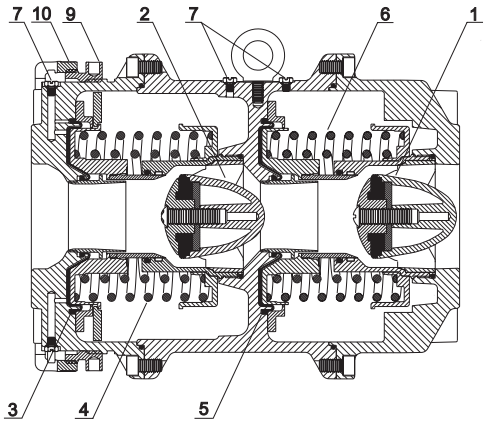


## Sizing

Select the size according to maximal flow. Maximal flow depends on the nominal size (DN) and pressure drop in the throttle (Fc) 12, 20 or 40 kPa.

Total pressure drop is calculated by the formula:

$$\Delta p_{min} = Fc + \left(0.01 \frac{q}{Kvd}\right)^2 \qquad [l/h, kPa]$$

## Installation

Install the valve in the return pipe, downstream of the consumer. Flow direction is shown by the arrow on the valve's identification plate. The best position is horizontal with vent screws (7) on top. Installation of a strainer upstream of the controller is recommended.
Connect copper impulse pipe (Δp+) to the pipeline upstream of the consumer. In case of a horizontal pipeline connect the copper impulse pipe laterally to prevent air and dirt from entering.
It is important to ensure that working temperature and pressure do not exceed allowed values.

Before you mount the controller, check the fitting length of the controller and distance between connections on the pipeline. You should fit the connections (welding and threaded ends) to the pipeline first, then clean the remains of welding operations if needed. Then install the controller. If you use flanged connections, check pitch diameter and the diameter of the holes for the screws.
When the pipeline and the controller is full of water and the pressure is stabilised, vent the controller by the vent screws (7).
Installation of a balancing valve STAD (STAF) is recommended to enable flow measurement, commissioning and troubleshooting.

**Normal pipe fittings**
Try to avoid mounting taps and pumps immediately before the valve.

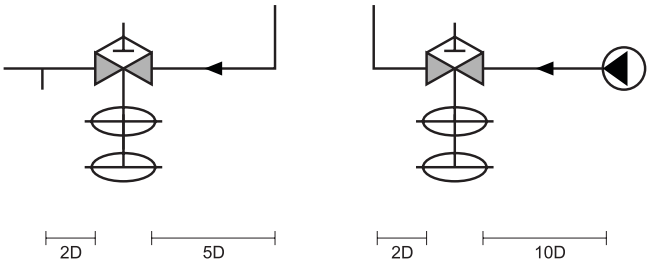


**Application example**

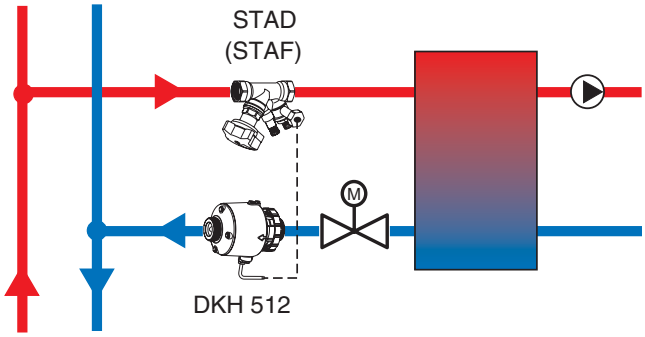


## Setting

**Flow adjustment of DN 15-50**

1. Unscrew the fixing screw (8) so that you can turn the scale easily.
2. Push the black scale (9) towards the valve's body so that it is separated from the brown setting ring (10) - the teeth go apart.
3. In the flow chart find the desired flow and corresponding position of the adjustment scale. Align the appropriate number on the scale with red pointer (12) on the brown ring (10).
4. Push the black scale (9) back to the brown ring (10) - the teeth couple again.
5. Turn the scale (9) together with the setting ring (10) clockwise until it stops.
6. Now set the desired flow so that you turn the scale anticlockwise until the fixing screw (8) is aligned with the hole (13) on the valve body (the red point on the black scale and the red mark on the body should be aligned)
7. Screw in the fixing screw (8) in the hole on the valve body (13).
8. In front of the fixing screw (8) you can put an inserted piece (14) that can be plombed (use holes on the scale (15) and inserted piece).

**Differential pressure adjustment**
Differential pressure is factory-preset to a fixed value of 15/40/60/100 kPa.

**Manual closing**
Turn the scale (9) together with the brown ring (10) clockwise to the end position.

**Flow adjustment of DN 65-80**

1. In the flow chart find the desired flow and corresponding position of the adjustment ring (9).
2. Adjust the flow adjustment ring (9) until the red pointer (12) is aligned with the corresponding number on the scale (8).
3. The flow adjustment nut is turned by the batons (11) supplied with the controller.

Flow chart for water has been measured on each individual valve. Each valve has its own identity number and individual flow chart included in the scope of supply. The copy of the chart can be provided by supplier. Provide next data: type, DN, Fc, Δp, serial number.

**DN 15-150**

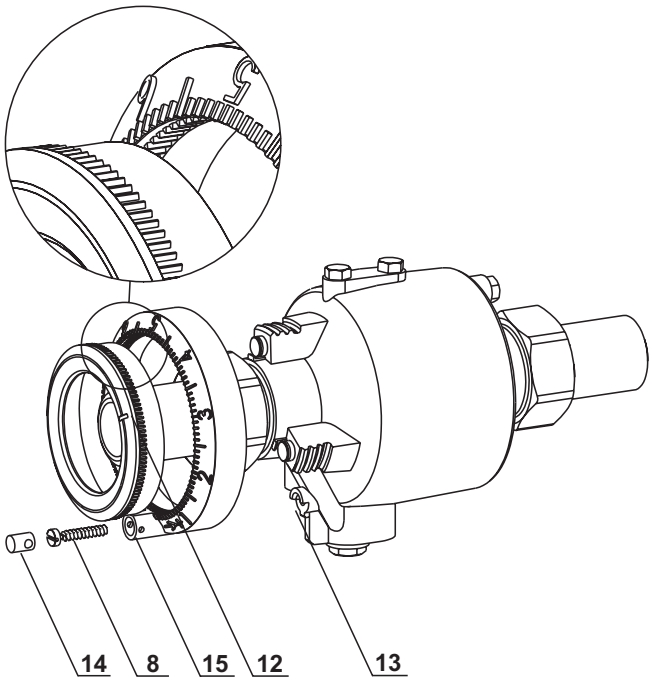


**DN 65-80**

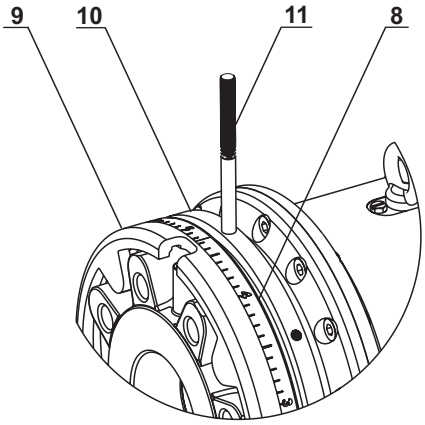

## Articles

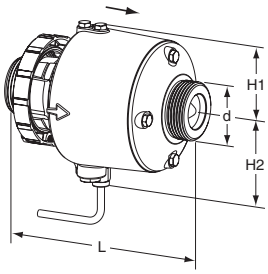


**DN 15-50**
**Male thread** – Separate connections optional.
1200 mm capillary pipe (Ø6) with compression coupling 1/4" included.

**LF, low flow**

| DN | d | L | H1 | H2 | Kvd | $q_{max}$ [m³/h] | Kg | EAN | Article No |
|---|---|---|---|---|---|---|---|---|---|
| **15 kPa** | | | | | | | | | |
| 15/20 | G1 | 123 | 45 | 92 | 7,0 | 1,1 | 1,6 | 3831112525429 | 52 757-020 |
| 25/32 | G1 1/4 | 145 | 53 | 97 | 18 | 3,3 | 2,7 | 3831112525528 | 52 757-025 |
| 40/50 | G2 | 190 | 66 | 110 | 40 | 7,5 | 4,8 | 3831112526648 | 52 757-040 |
| **40 kPa** | | | | | | | | | |
| 15/20 | G1 | 123 | 45 | 92 | 7,0 | 1,1 | 1,6 | 3831112525894 | 52 757-120 |
| 25/32 | G1 1/4 | 145 | 53 | 97 | 18 | 3,3 | 2,7 | 3831112501973 | 52 757-125 |
| 40/50 | G2 | 190 | 66 | 110 | 40 | 7,5 | 4,8 | 3831112504691 | 52 757-140 |
| **60 kPa** | | | | | | | | | |
| 15/20 | G1 | 123 | 45 | 92 | 7,0 | 1,1 | 1,6 | 3831112500204 | 52 758-120 |
| 25/32 | G1 1/4 | 145 | 53 | 97 | 18 | 3,3 | 2,7 | 3831112501966 | 52 758-125 |
| 40/50 | G2 | 190 | 66 | 110 | 40 | 7,5 | 4,8 | 3831112525856 | 52 758-140 |
| **100 kPa** | | | | | | | | | |
| 15/20 | G1 | 123 | 45 | 92 | 7,0 | 1,1 | 1,6 | 3831112500211 | 52 758-020 |
| 25/32 | G1 1/4 | 145 | 53 | 97 | 18 | 3,3 | 2,7 | 3831112500228 | 52 758-025 |
| 40/50 | G2 | 190 | 66 | 110 | 40 | 7,5 | 4,8 | 3831112503373 | 52 758-040 |

**NF, normal flow**

| DN | d | L | H1 | H2 | Kvd | $q_{max}$ [m³/h] | Kg | EAN | Article No |
|---|---|---|---|---|---|---|---|---|---|
| **15 kPa** | | | | | | | | | |
| 15/20 | G1 | 123 | 45 | 92 | 7,0 | 1,3 | 1,6 | 3831112525436 | 52 757-220 |
| 25/32 | G1 1/4 | 145 | 53 | 97 | 18 | 4,4 | 2,7 | 3831112525498 | 52 757-225 |
| 40/50 | G2 | 190 | 66 | 110 | 40 | 10 | 4,8 | 3831112526617 | 52 757-240 |
| **40 kPa** | | | | | | | | | |
| 15/20 | G1 | 123 | 45 | 92 | 7,0 | 1,3 | 1,6 | 3831112525962 | 52 757-320 |
| 25/32 | G1 1/4 | 145 | 53 | 97 | 18 | 4,4 | 2,7 | 3831112503311 | 52 757-325 |
| 40/50 | G2 | 190 | 66 | 110 | 40 | 10 | 4,8 | 3831112503670 | 52 757-340 |
| **60 kPa** | | | | | | | | | |
| 15/20 | G1 | 123 | 45 | 92 | 7,0 | 1,3 | 1,6 | 3831112525948 | 52 758-220 |
| 25/32 | G1 1/4 | 145 | 53 | 97 | 18 | 4,4 | 2,7 | 3831112525474 | 52 758-225 |
| 40/50 | G2 | 190 | 66 | 110 | 40 | 10 | 4,8 | 3831112526273 | 52 758-240 |
| **100 kPa** | | | | | | | | | |
| 15/20 | G1 | 123 | 45 | 92 | 7,0 | 1,3 | 1,6 | 3831112525870 | 52 758-320 |
| 25/32 | G1 1/4 | 145 | 53 | 97 | 18 | 4,4 | 2,7 | 3831112525481 | 52 758-325 |
| 40/50 | G2 | 190 | 66 | 110 | 40 | 10 | 4,8 | 3831112503038 | 52 758-340 |

→ = Flow direction
Kvd = Is the Kv value of the differential pressure control component when fully open.

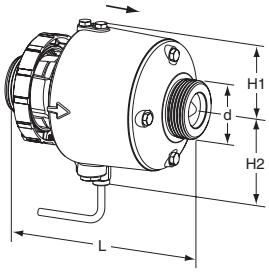


**HF, high flow**

| DN | d | L | H1 | H2 | Kvd | $q_{max}$ [m³/h] | Kg | EAN | Article No |
|---|---|---|---|---|---|---|---|---|---|
| **15 kPa** | | | | | | | | | |
| 15/20 | G1 | 123 | 45 | 92 | 7,0 | 1,8 | 1,6 | 3831112525887 | 52 757-420 |
| 25/32 | G1 1/4 | 145 | 53 | 97 | 18 | 6,0 | 2,7 | 3831112526976 | 52 757-425 |
| 40/50 | G2 | 190 | 66 | 110 | 40 | 14 | 4,8 | 3831112505124 | 52 757-440 |
| **40 kPa** | | | | | | | | | |
| 15/20 | G1 | 123 | 45 | 92 | 7,0 | 1,8 | 1,6 | 3831112525955 | 52 757-520 |
| 25/32 | G1 1/4 | 145 | 53 | 97 | 18 | 6,0 | 2,7 | 3831112504257 | 52 757-525 |
| 40/50 | G2 | 190 | 66 | 110 | 40 | 14 | 4,8 | 3831112505018 | 52 757-540 |
| **60 kPa** | | | | | | | | | |
| 15/20 | G1 | 123 | 45 | 92 | 7,0 | 1,8 | 1,6 | 3831112504837 | 52 758-420 |
| 25/32 | G1 1/4 | 145 | 53 | 97 | 18 | 6,0 | 2,7 | 3831112504622 | 52 758-425 |
| 40/50 | G2 | 190 | 66 | 110 | 40 | 14 | 4,8 | 3831112504240 | 52 758-440 |
| **100 kPa** | | | | | | | | | |
| 15/20 | G1 | 123 | 45 | 92 | 7,0 | 1,8 | 1,6 | 3831112504868 | 52 758-520 |
| 25/32 | G1 1/4 | 145 | 53 | 97 | 18 | 6,0 | 2,7 | 3831112525733 | 52 758-525 |
| 40/50 | G2 | 190 | 66 | 110 | 40 | 14 | 4,8 | 3831112504066 | 52 758-540 |

→ = Flow direction
Kvd = Is the Kv value of the differential pressure control component when fully open.

**DN 65-80**
**Flanges** – Do not need any separate connections.
DN 65-80 also fit PN 16 flanges.
1500 mm capillary pipe (Ø6) with compression coupling 1/4” included.

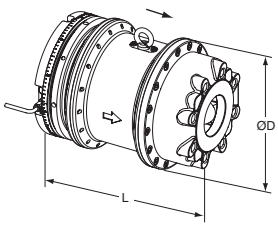


**LF, low flow**

| DN | L | D | Kvd | $q_{max}$ [m³/h] | Kg | EAN | Article No |
|---|---|---|---|---|---|---|---|
| **15 kPa** | | | | | | | |
| 65 | 290 | 220 | 60 | 15 | 30 | 3831112504776 | 52 757-065 |
| 80 | 310 | 220 | 60 | 18 | 32 | 3831112501560 | 52 757-080 |
| **40 kPa** | | | | | | | |
| 65 | 290 | 220 | 60 | 15 | 30 | 3831112504370 | 52 757-165 |
| 80 | 310 | 220 | 60 | 18 | 32 | 3831112501362 | 52 757-180 |
| **60 kPa** | | | | | | | |
| 65 | 290 | 220 | 60 | 15 | 30 | 3831112504653 | 52 758-165 |
| 80 | 310 | 220 | 60 | 18 | 32 | 3831112501430 | 52 758-180 |
| **100 kPa** | | | | | | | |
| 65 | 290 | 220 | 60 | 15 | 30 | 3831112504400 | 52 758-065 |
| 80 | 310 | 220 | 60 | 18 | 32 | 3831112501379 | 52 758-080 |

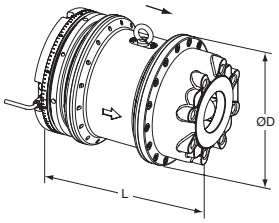


**NF, normal flow**

| DN | L | D | Kvd | $q_{max}$ [m³/h] | Kg | EAN | Article No |
|---|---|---|---|---|---|---|---|
| **15 kPa** | | | | | | | |
| 65 | 290 | 220 | 60 | 20 | 30 | 3831112505292 | 52 757-265 |
| 80 | 310 | 220 | 60 | 24 | 32 | 3831112500679 | 52 757-280 |
| **40 kPa** | | | | | | | |
| 65 | 290 | 220 | 60 | 20 | 30 | 3831112503403 | 52 757-365 |
| 80 | 310 | 220 | 60 | 24 | 32 | 3831112505261 | 52 757-380 |
| **60 kPa** | | | | | | | |
| 65 | 290 | 220 | 60 | 20 | 30 | 3831112504561 | 52 758-265 |
| 80 | 310 | 220 | 60 | 24 | 32 | 3831112501393 | 52 758-280 |
| **100 kPa** | | | | | | | |
| 65 | 290 | 220 | 60 | 20 | 30 | 3831112504462 | 52 758-365 |
| 80 | 310 | 220 | 60 | 24 | 32 | 3831112526679 | 52 758-380 |

**HF, high flow**

| DN | L | D | Kvd | $q_{max}$ [m³/h] | Kg | EAN | Article No |
|---|---|---|---|---|---|---|---|
| **15 kPa** | | | | | | | |
| 65 | 290 | 220 | 60 | 26 | 30 | 3831112504851 | 52 757-465 |
| 80 | 310 | 220 | 60 | 32 | 32 | 3831112503069 | 52 757-480 |
| **40 kPa** | | | | | | | |
| 65 | 290 | 220 | 60 | 26 | 30 | 3831112501119 | 52 757-565 |
| 80 | 310 | 220 | 60 | 32 | 32 | 3831112501218 | 52 757-580 |
| **60 kPa** | | | | | | | |
| 65 | 290 | 220 | 60 | 26 | 30 | 3831112501126 | 52 758-465 |
| 80 | 310 | 220 | 60 | 32 | 32 | 3831112501331 | 52 758-480 |
| **100 kPa** | | | | | | | |
| 65 | 290 | 220 | 60 | 26 | 30 | 3831112504844 | 52 758-565 |
| 80 | 310 | 220 | 60 | 32 | 32 | 3831112502987 | 52 758-580 |

→ = Flow direction
Kvd = Is the Kv value of the differential pressure control component when fully open.

## Connections for DN 15-50

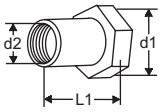


**With female thread**
Threads according to ISO 228.
Swivelling nut

| d1 | d2 | L1* | EAN | Article No |
|---|---|---|---|---|
| G1 | G1/2 | 26 | 3831112501027 | 52 759-015 |
| G1 | G3/4 | 32 | 3831112501034 | 52 759-020 |
| G1 1/4 | G1 | 47 | 3831112501041 | 52 759-025 |
| G1 1/4 | G1 1/4 | 52 | 3831112501058 | 52 759-032 |
| G2 | G1 1/2 | 52 | 3831112503489 | 52 759-040 |
| G2 | G2 | 64,5 | 3831112503205 | 52 759-050 |

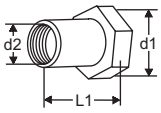


**With female thread Rc**
Threads according to ISO 7-1
Swivelling nut

| d1 | d2 | L1* | EAN | Article No |
|---|---|---|---|---|
| G1 | Rc1/2 | 26 | 3831112527454 | 52 751-301 |
| G1 | Rc3/4 | 32 | 3831112527461 | 52 751-302 |
| G1 1/4 | Rc1 | 47 | 3831112527478 | 52 751-303 |
| G1 1/4 | Rc1 1/4 | 52 | 3831112527485 | 52 751-304 |
| G2 | Rc1 1/2 | 52 | 3831112527492 | 52 751-305 |
| G2 | Rc2 | 64,5 | 3831112527508 | 52 751-306 |

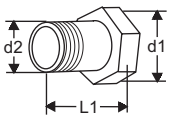


**With male thread**
Threads according to ISO 7
Swivelling nut

| d1 | d2 | L1* | EAN | Article No |
|---|---|---|---|---|
| G1 | R1/2 | 34 | 3831112500983 | 52 759-115 |
| G1 | R3/4 | 40 | 3831112500990 | 52 759-120 |
| G1 1/4 | R1 | 40 | 3831112501003 | 52 759-125 |
| G1 1/4 | R1 1/4 | 45 | 3831112501010 | 52 759-132 |
| G2 | R1 1/2 | 45 | 3831112503342 | 52 759-140 |
| G2 | R2 | 50 | 3831112503472 | 52 759-150 |

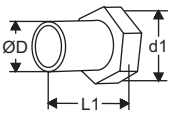


**For welding**
Swivelling nut

| d1 | D | L1* | EAN | Article No |
|---|---|---|---|---|
| G1 | 20,8 | 37 | 3831112500945 | 52 759-315 |
| G1 | 26,3 | 42 | 3831112500952 | 52 759-320 |
| G1 1/4 | 33,2 | 47 | 3831112500969 | 52 759-325 |
| G1 1/4 | 40,9 | 47 | 3831112500976 | 52 759-332 |
| G2 | 48,0 | 47 | 3831112501140 | 52 759-340 |
| G2 | 60,0 | 52 | 3831112501294 | 52 759-350 |

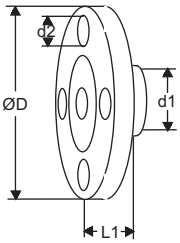


**With flange**

| d1 | d2 | D | L1* | EAN | Article No |
|---|---|---|---|---|---|
| G1 | M12 | 95 | 10 | 3831112501065 | 52 759-515 |
| G1 | M12 | 105 | 20 | 3831112501072 | 52 759-520 |
| G1 1/4 | M12 | 115 | 5 | 3831112504318 | 52 759-525 |
| G1 1/4 | M16 | 140 | 15 | 3831112501096 | 52 759-532 |
| G2 | M16 | 150 | 5 | 3831112504325 | 52 759-540 |
| G2 | M16 | 165 | 20 | 3831112501317 | 52 759-550 |

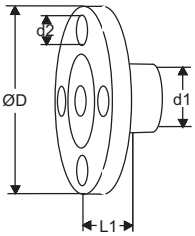


**With flange (extended)**
**Attention!** Must be used on the **inlet** side.

| d1 | d2 | D | L1* | EAN | Article No |
|---|---|---|---|---|---|
| G1 | M12 | 95 | 47 | 3831112501157 | 52 759-615 |
| G1 | M12 | 105 | 47 | 3831112500136 | 52 759-620 |
| G1 1/4 | M12 | 115 | 62 | 3831112503533 | 52 759-625 |
| G1 1/4 | M16 | 140 | 62 | 3831112526129 | 52 759-632 |
| G2 | M16 | 150 | 72 | 3831112505025 | 52 759-640 |
| G2 | M16 | 165 | 72 | 3831112503892 | 52 759-650 |

*) Fitting length (from the gasket surface to the end of the connection).

# DKH 512 DN65,80

IMI TA

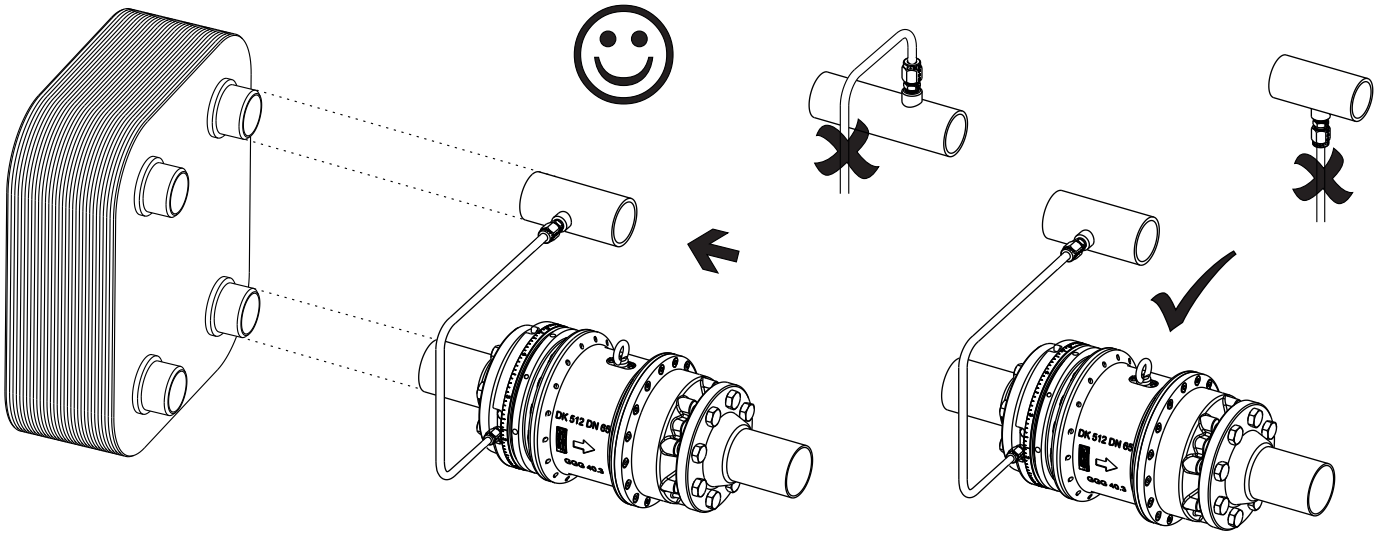


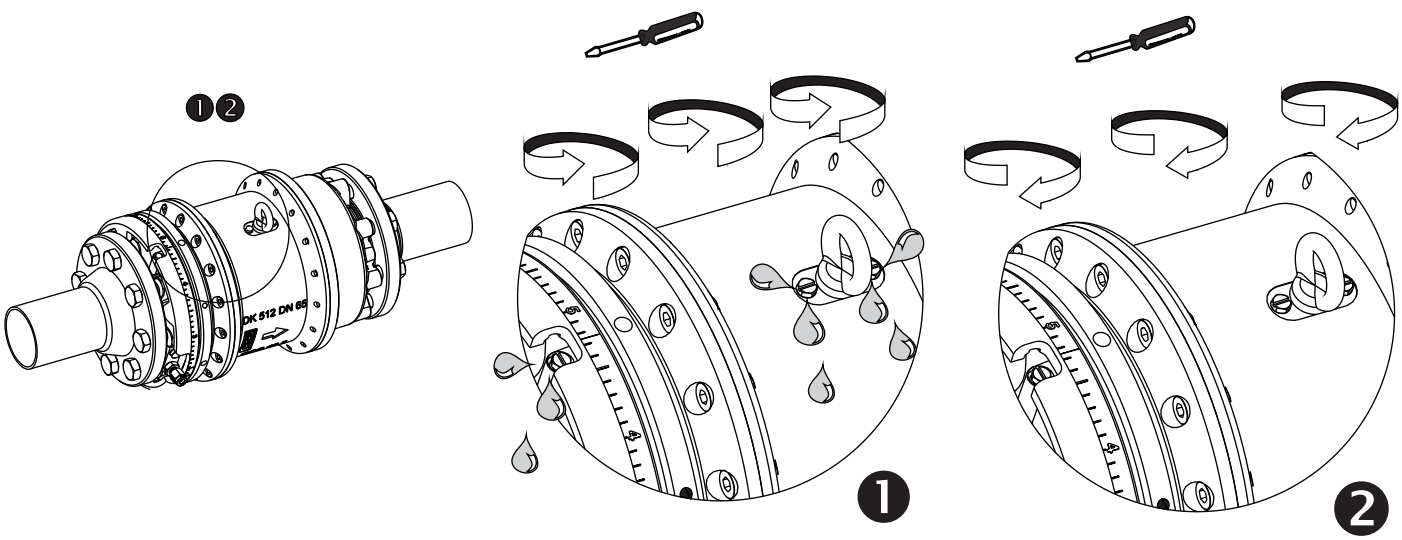


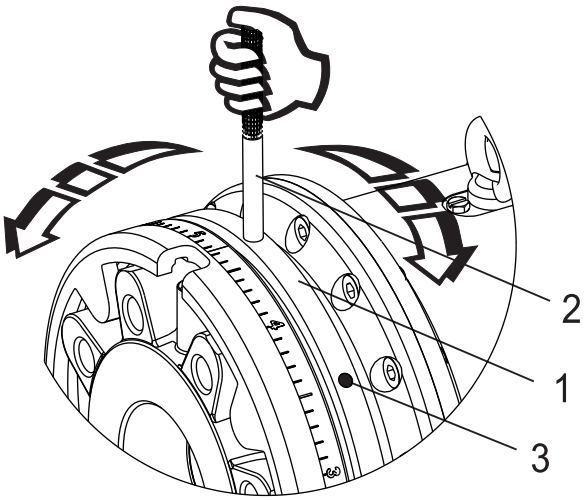


**FLOW ADJUSTMENT**

Define the designed maximum flow of the system.

Find the corresponding number from the flow chart (for example 3,5).

Adjust (screw or unscrew) the flow adjustment nut (1) using the stick (2) until the red pointer (3) is aligned with the corresponding number (for example 3,5).

The water flow has been measured on each individual valve in all positions of adjustment scale. Each valve has its own identity number and individual flow chart included in the scope of supply. The flow chart corresponds to water only. The copy of the chart for the water or other medium can be provided by supplier. Provide next data: medium, type, DN, Fc, serial number.

Approved by:

10757 - Navodilo (smeško) DKH 512 DN65,80 by Alen Jerman 21.06.12 - Rev. A

\\Server\3. Razvoj\DESIGN\URADNO\OBDELAVA\299

# DKH 512 DN15/20 LF

IMI TA

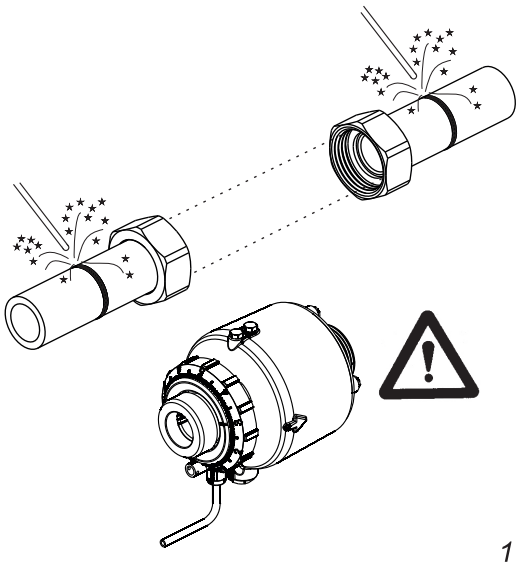

1

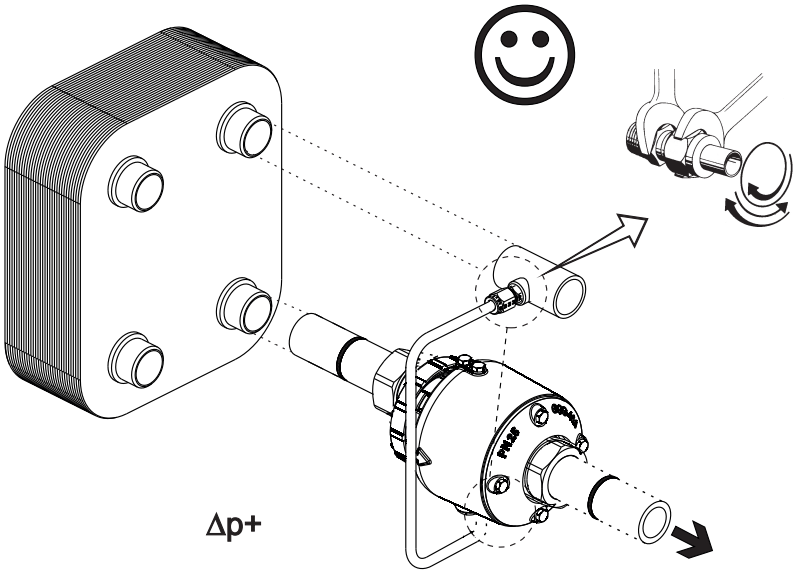


2

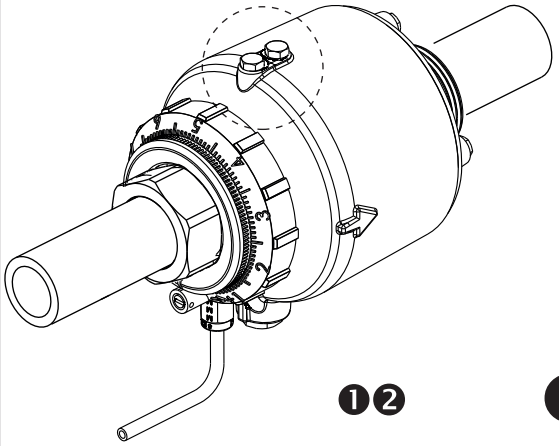

❶❷

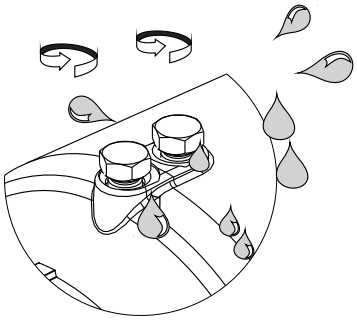

❶

SW 8

Max. 2 x 360°

Mp = 0,5 Nm

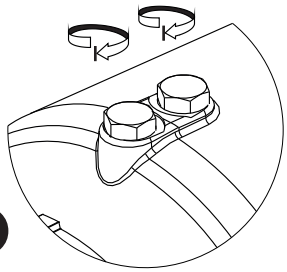

❷

3

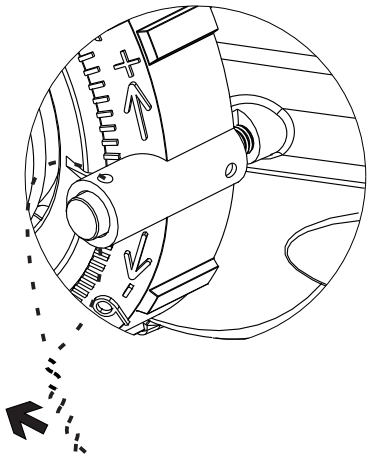

❸

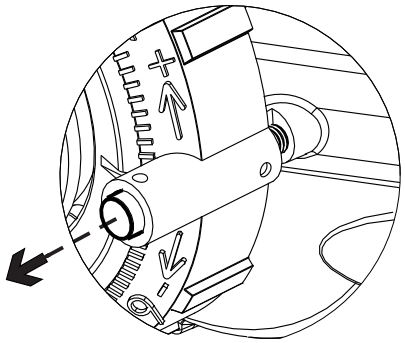

❹

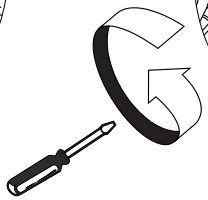

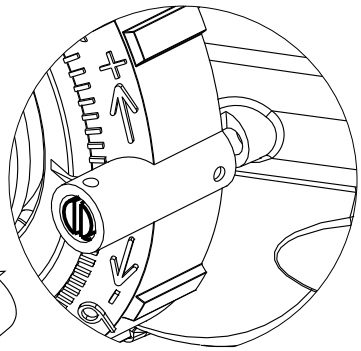

❺

4

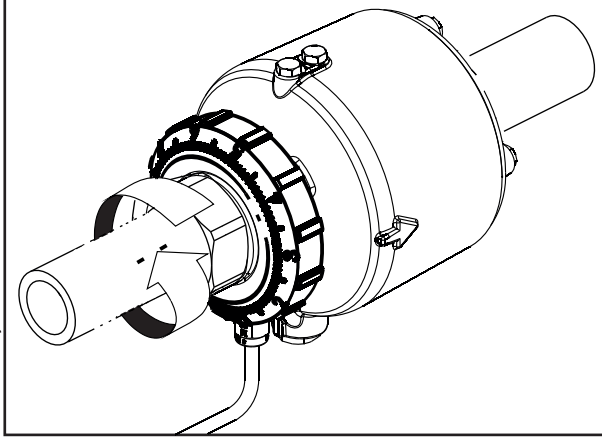

❻

5

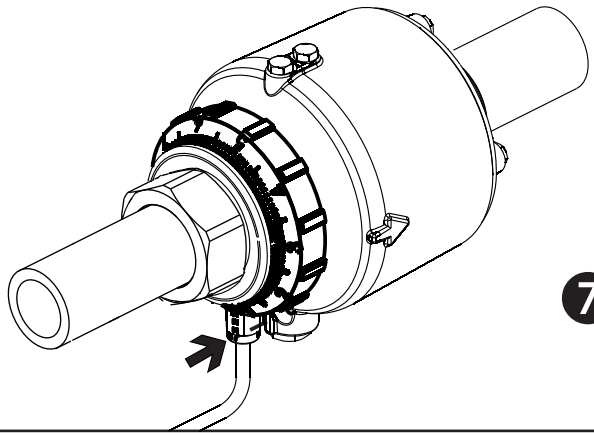

❼

6

Approved by:

13182 - Navodilo (smeško) DKH 512 DN15/20 LF by Jože Hočevar 19.06.2012 - Rev. A

\\Server\3. Razvoj\DESIGN\URADNO\OBDELAVA\299

# DKH 512 DN15/20 LF

IMI TA

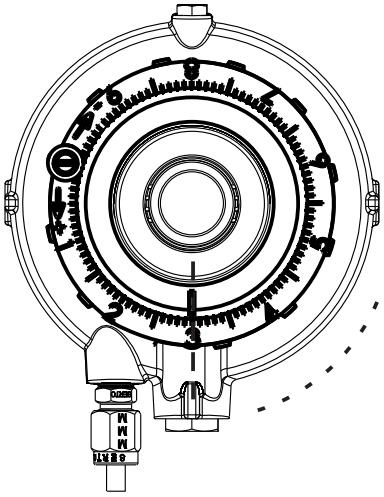

8

**DKH 512 DN 15/20 ; Fc=12** 8

| Position of scale-Einstellung-Nastavitev | | | | | | | | | | |
|---|---|---|---|---|---|---|---|---|---|---|
| | 0,0 | 1,0 | 2,0 | 3,0 | 4,0 | 5,0 | 6,0 | 7,0 | 8,0 | 9,0 |
| ,0 | 0 | 79 | 282 | 468 | 647 | 816 | 945 | 1040 | 1062 | 1072 |
| ,1 | 8 | 99 | 301 | 486 | 664 | 829 | 955 | 1042 | 1063 | 1073 |
| ,2 | 16 | 120 | 319 | 504 | 681 | 842 | 964 | 1044 | 1064 | 1074 |
| ,3 | 24 | 140 | 338 | 522 | 698 | 855 | 974 | 1047 | 1065 | 1075 |
| ,4 | 32 | 160 | 356 | 540 | 715 | 868 | 983 | 1049 | 1066 | 1076 |
| ,5 | 40 | 181 | 375 | 558 | 732 | 881 | 993 | 1051 | 1067 | 1077 |
| ,6 | 47 | 201 | 394 | 575 | 748 | 893 | 1002 | 1053 | 1068 | 1077 |
| ,7 | 55 | 221 | 412 | 593 | 765 | 906 | 1012 | 1055 | 1069 | 1078 |
| ,8 | 63 | 241 | 431 | 611 | 782 | 919 | 1021 | 1058 | 1070 | 1079 |
| ,9 | 71 | 262 | 449 | 629 | 799 | 932 | 1031 | 1060 | 1071 | 1080 |
| Flow - Volumenstrom - Pretok (l/h) | | | | | | | | | | |

7

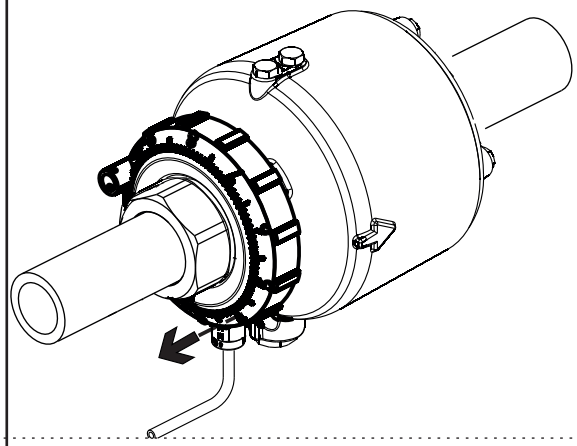

9

8

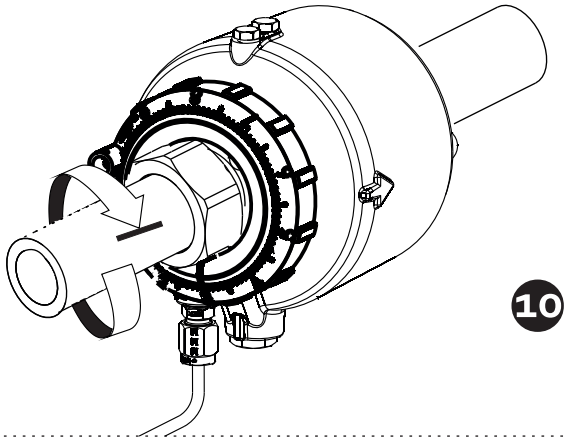

10

9

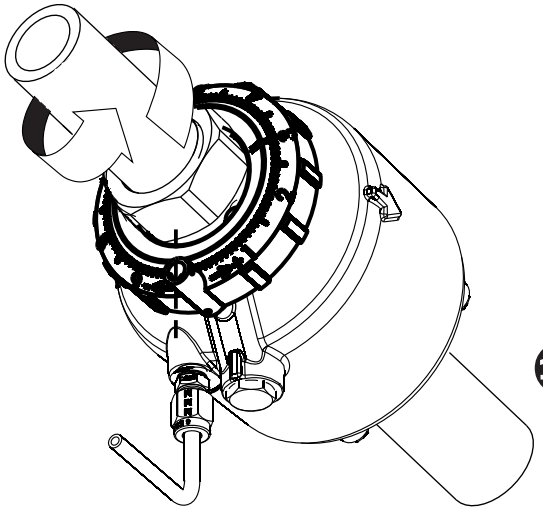

11

10

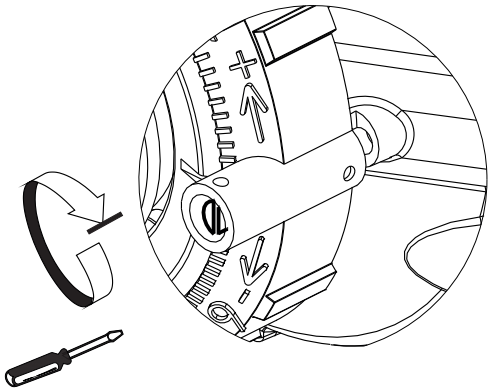

12

11

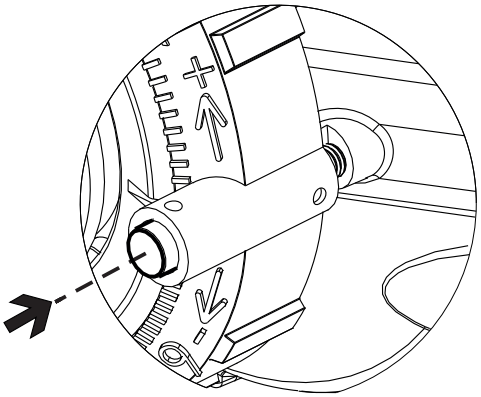

13

12

14

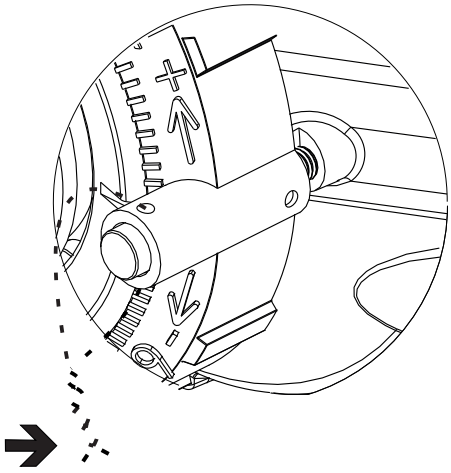

13

# DKH 512 DN15/20 NF

IMI TA

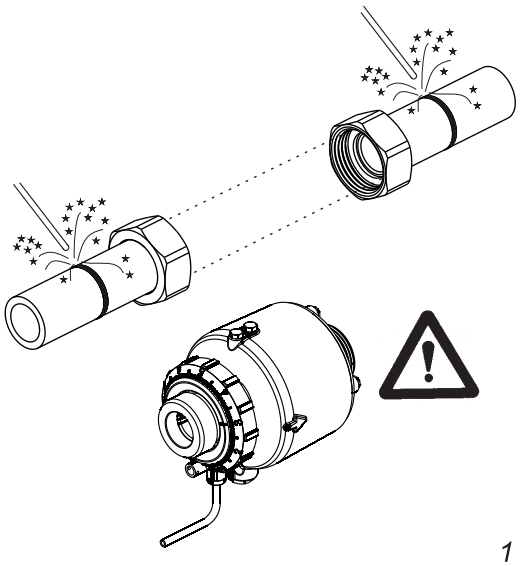

1

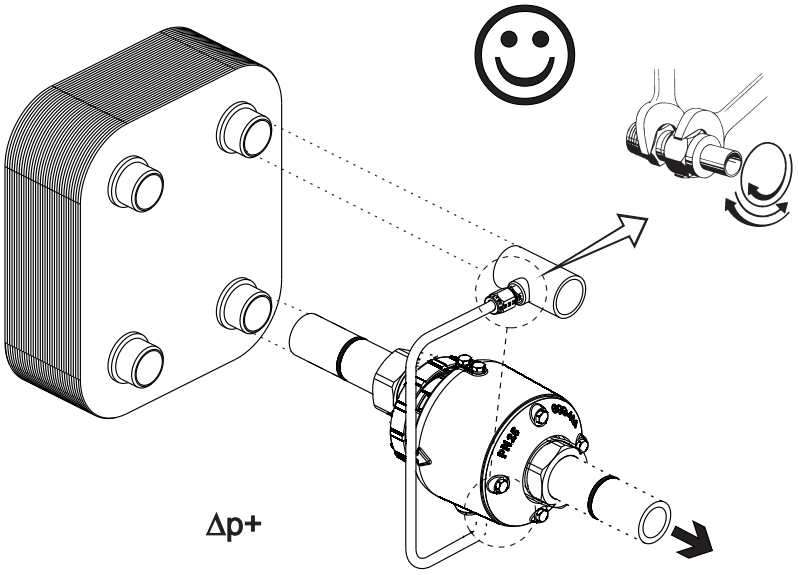


2

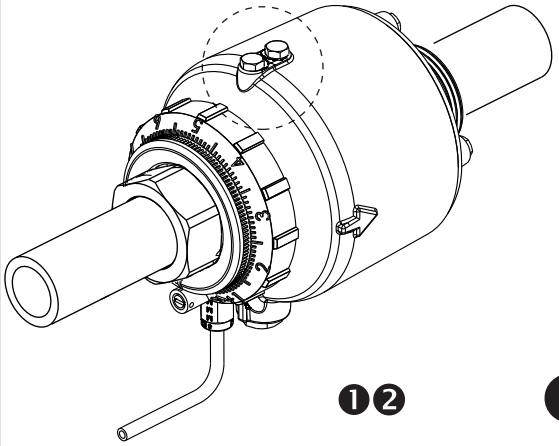

❶❷

SW 8

Max. 2 x 360°

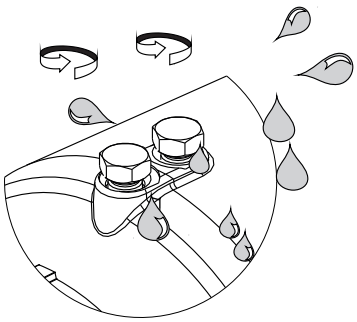

❶

Mp = 0,5 Nm

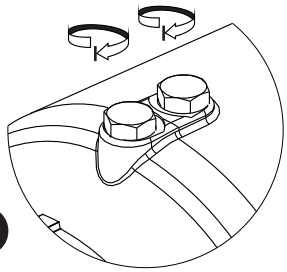

❷

3

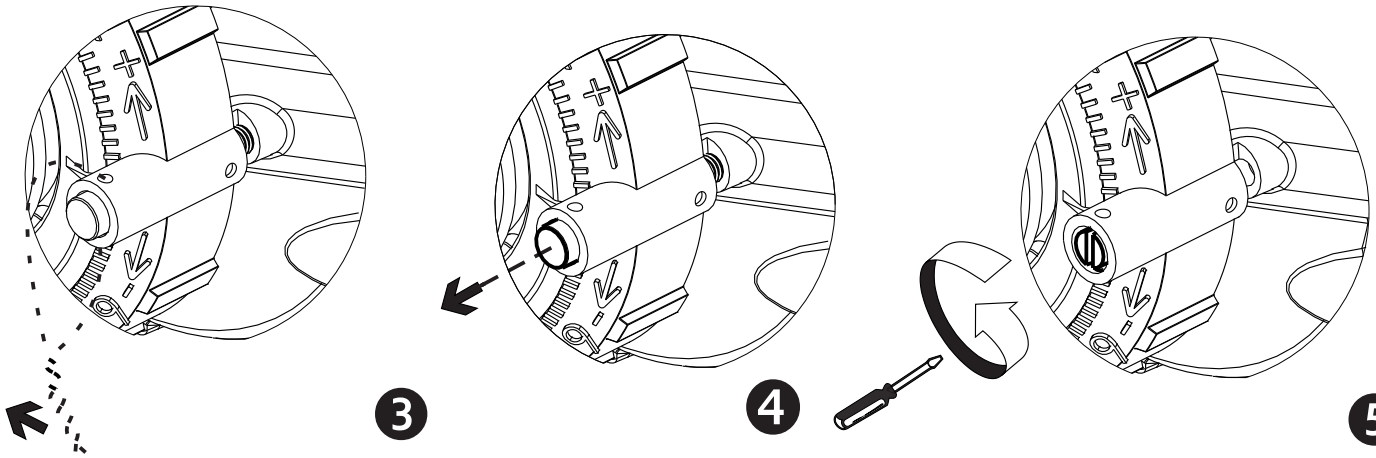

❸ ❹ ❺

4

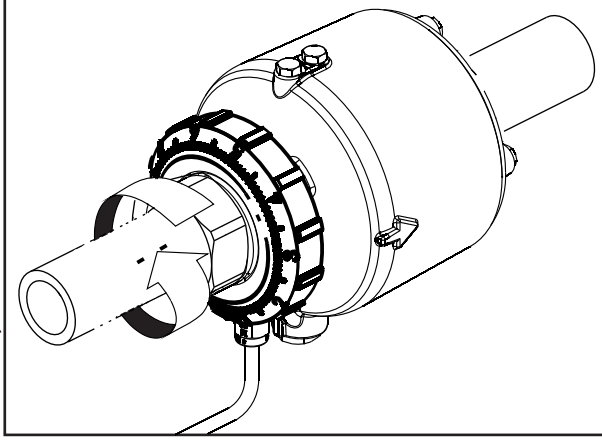

❻

5

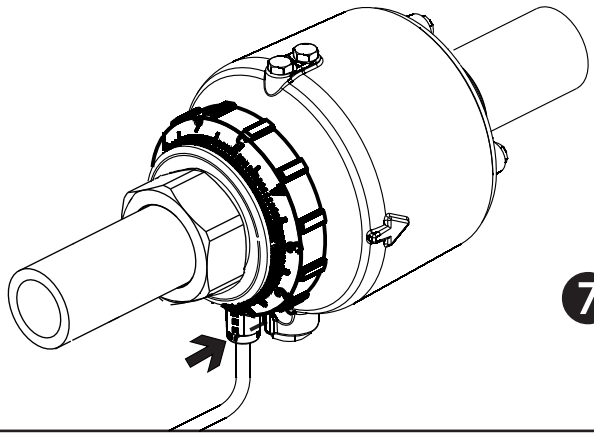

❼

6

Approved by:

13183 - Navodilo (smeško) DKH 512 DN15/20 NF by Jože Hočevar 19.06.2012 - Rev. A

\\Server\3. Razvoj\DESIGN\URADNO\OBDELAVA\299

# DKH 512 DN15/20 NF

IMI TA

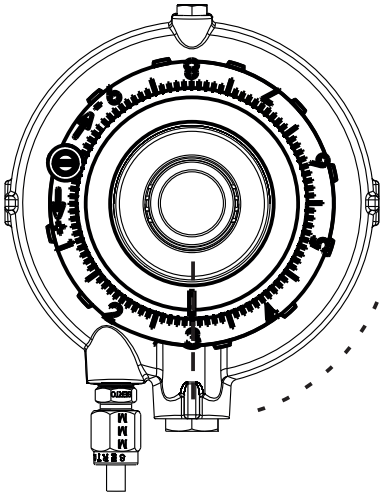

8

**DKH 512 DN 15/20 ; Fc = 20**

Position of scale-Einstellung-Nastavitev

| | 0,0 | 1,0 | 2,0 | 3,0 | 4,0 | 5,0 | 6,0 | 7,0 | 8,0 | 9,0 |
|---|---|---|---|---|---|---|---|---|---|---|
| ,0 | 0 | 66 | 208 | 449 | 641 | 861 | 1045 | 1183 | 1257 | 1274 |
| ,1 | 7 | 80 | 232 | 468 | 663 | 879 | 1059 | 1190 | 1259 | 1275 |
| ,2 | 13 | 94 | 256 | 487 | 685 | 898 | 1073 | 1198 | 1260 | 1276 |
| ,3 | 20 | 109 | 280 | 507 | 707 | 916 | 1086 | 1205 | 1262 | 1277 |
| ,4 | 26 | 123 | 304 | 526 | 729 | 935 | 1100 | 1213 | 1264 | 1278 |
| ,5 | 33 | 137 | 329 | 545 | 751 | 953 | 1114 | 1220 | 1266 | 1279 |
| ,6 | 40 | 151 | 353 | 564 | 773 | 971 | 1128 | 1227 | 1267 | 1279 |
| ,7 | 46 | 165 | 377 | 583 | 795 | 990 | 1142 | 1235 | 1269 | 1280 |
| ,8 | 53 | 180 | 401 | 603 | 817 | 1008 | 1155 | 1242 | 1271 | 1281 |
| ,9 | 59 | 194 | 425 | 622 | 839 | 1027 | 1169 | 1250 | 1272 | 1282 |

Flow - Volumenstrom - Pretok (l/h)

7

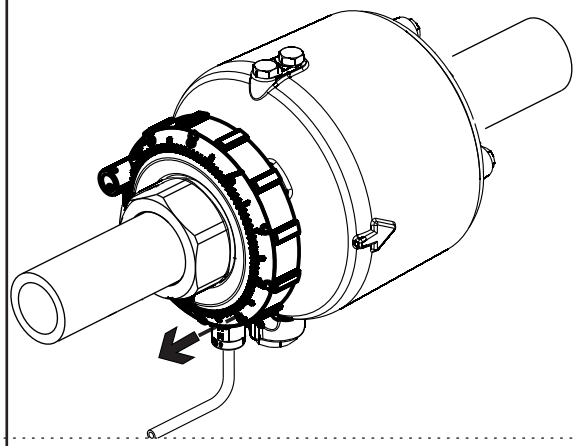

9

8

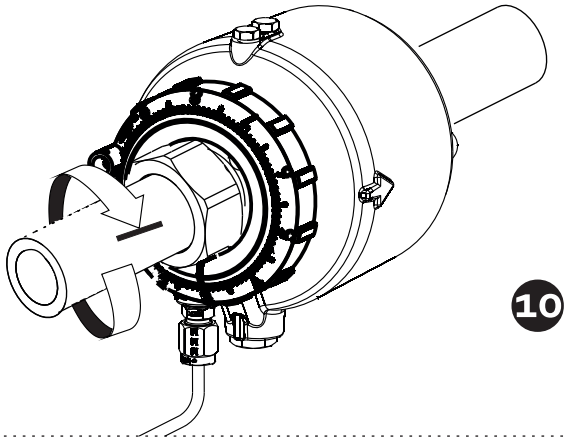

10

9

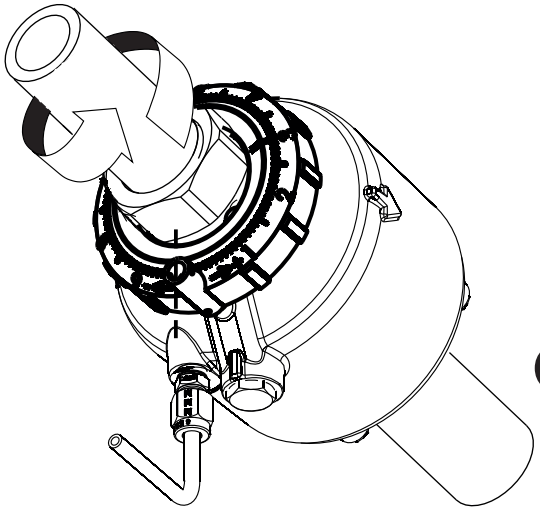

11

10

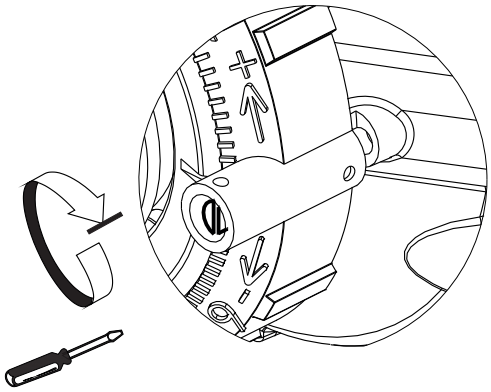

12

11

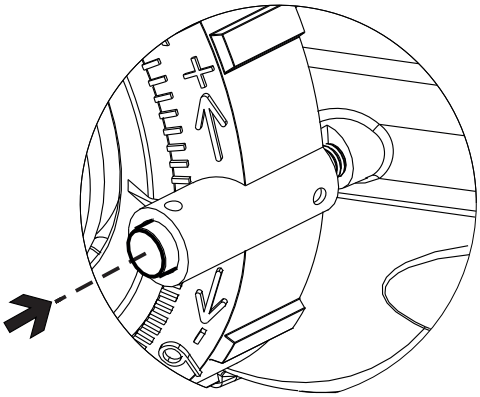

13

12

14

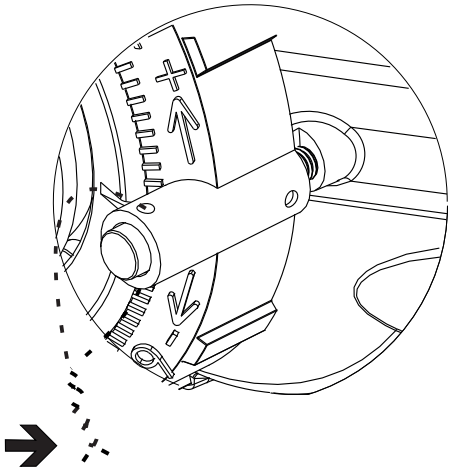

13

# DKH 512 DN15/20 HF

IMI TA

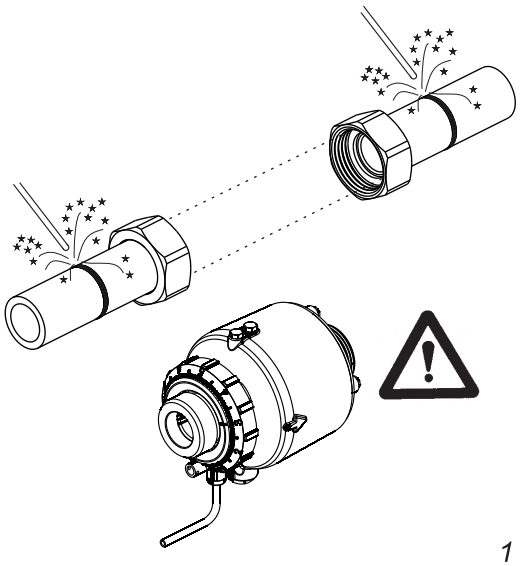

1

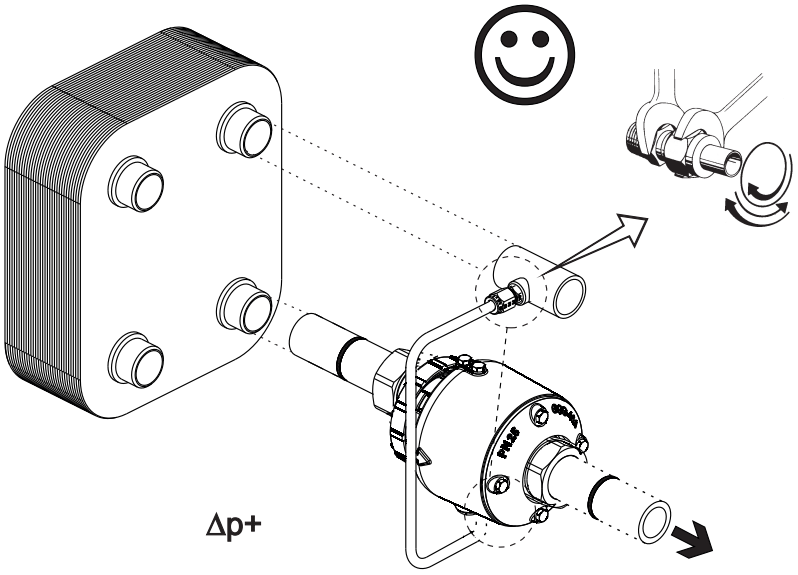


2

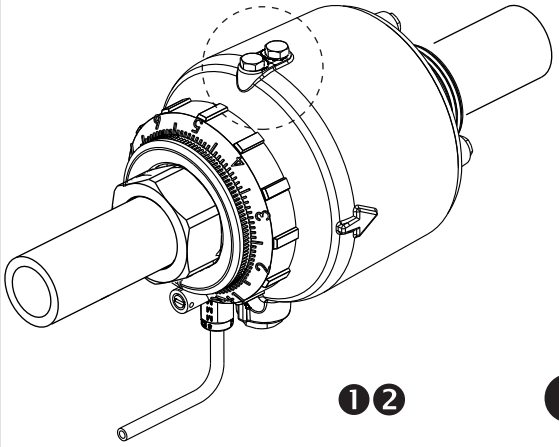

❶❷

SW 8

Max. 2 x 360°

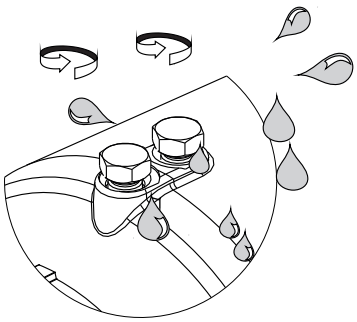

❶

Mp = 0,5 Nm

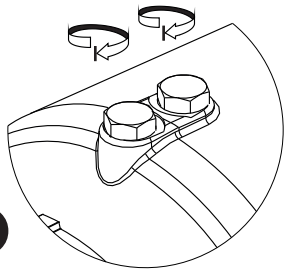

❷

3

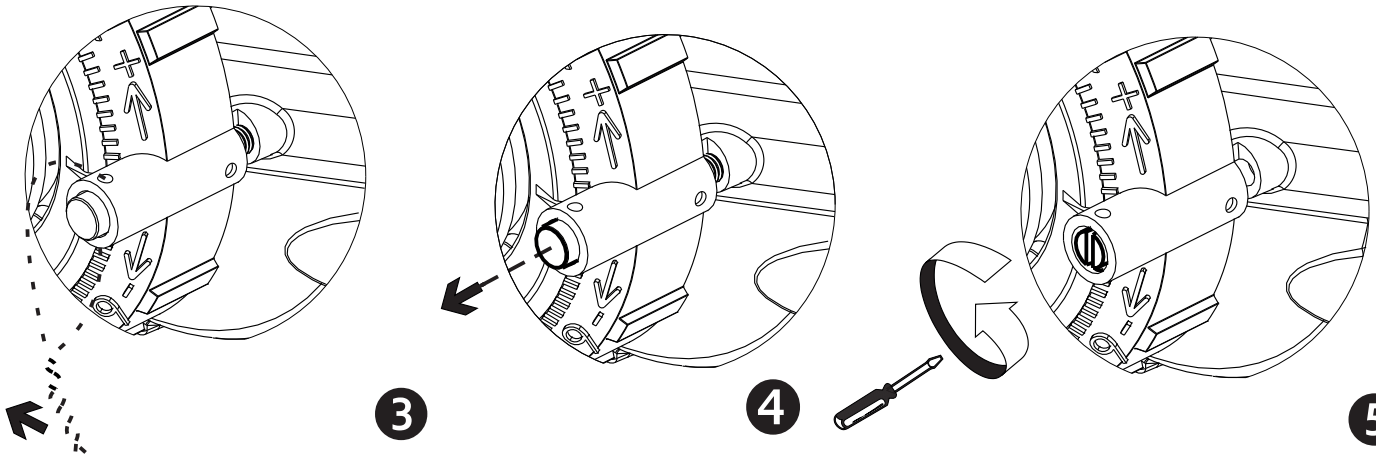

❸ ❹ ❺

4

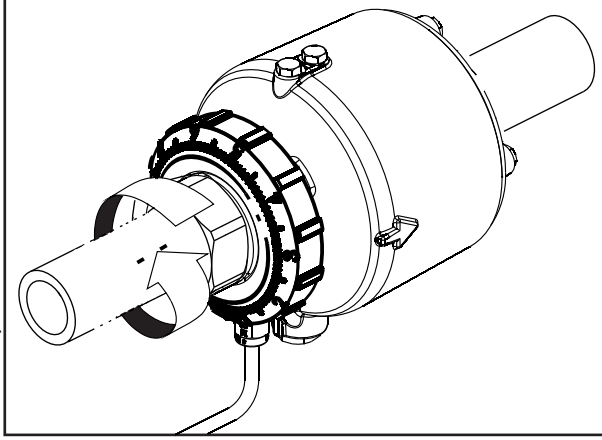

❻

5

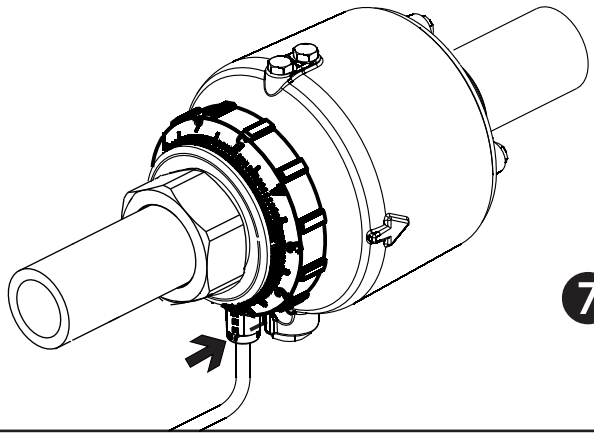

❼

6

Approved by:

13184 - Navodilo (smeško) DKH 512 DN15/20 HF by Jože Hočevar 19.06.2012 - Rev. A

\\Server\3. Razvoj\DESIGN\URADNO\OBDELAVA\299

# DKH 512 DN15/20 HF

IMI TA

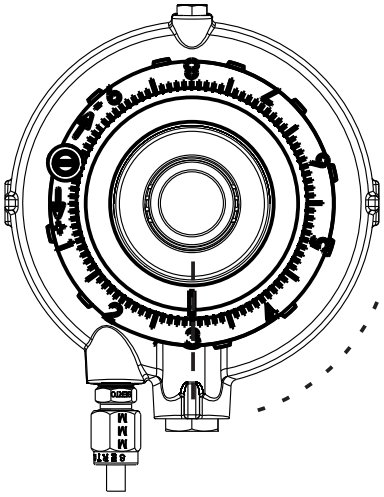

8

**DKH 512 DN 15/20 ; Fc = 40** 8

Position of scale-Einstellung-Nastavitev

| | 0,0 | 1,0 | 2,0 | 3,0 | 4,0 | 5,0 | 6,0 | 7,0 | 8,0 | 9,0 |
|---|---|---|---|---|---|---|---|---|---|---|
| ,0 | 0 | 137 | 490 | 816 | 1125 | 1419 | 1682 | 1864 | 1907 | 1922 |
| ,1 | 14 | 172 | 523 | 847 | 1154 | 1445 | 1700 | 1868 | 1909 | 1923 |
| ,2 | 27 | 208 | 555 | 878 | 1184 | 1472 | 1718 | 1873 | 1910 | 1924 |
| ,3 | 41 | 243 | 588 | 909 | 1213 | 1498 | 1737 | 1877 | 1912 | 1924 |
| ,4 | 55 | 278 | 620 | 940 | 1243 | 1524 | 1755 | 1881 | 1913 | 1925 |
| ,5 | 69 | 314 | 653 | 971 | 1272 | 1551 | 1773 | 1886 | 1915 | 1926 |
| ,6 | 82 | 349 | 686 | 1001 | 1301 | 1577 | 1791 | 1890 | 1916 | 1927 |
| ,7 | 96 | 384 | 718 | 1032 | 1331 | 1603 | 1809 | 1894 | 1918 | 1928 |
| ,8 | 110 | 419 | 751 | 1063 | 1360 | 1629 | 1828 | 1898 | 1919 | 1928 |
| ,9 | 123 | 455 | 783 | 1094 | 1390 | 1656 | 1846 | 1903 | 1921 | 1929 |

Flow- Volumenstrom - Pretok (l/h)

7

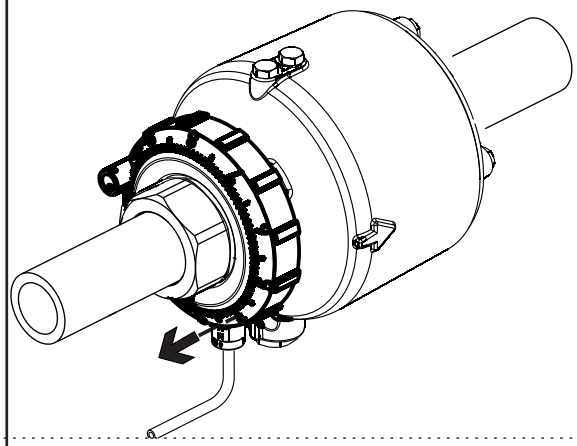

9

8

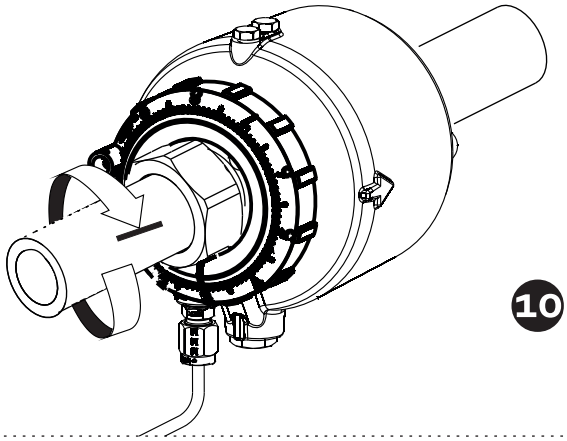

10

9

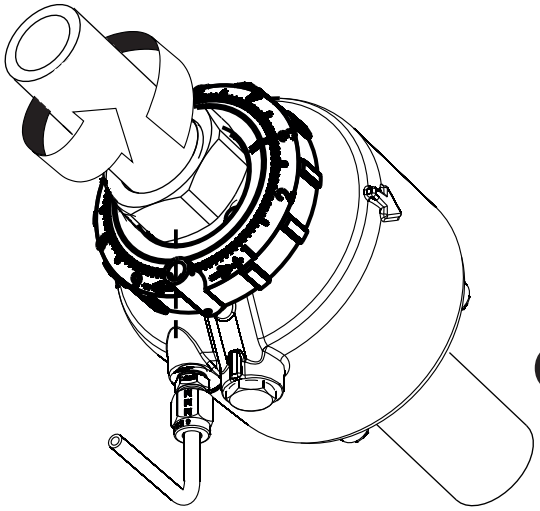

11

10

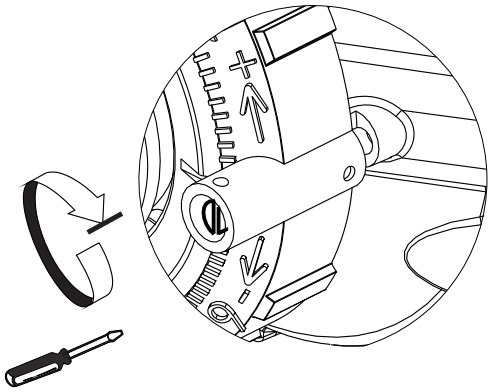

12

11

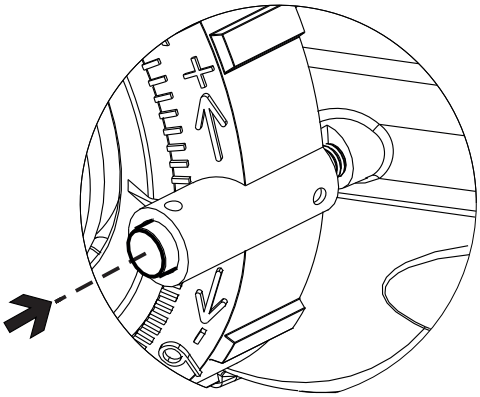

13

12

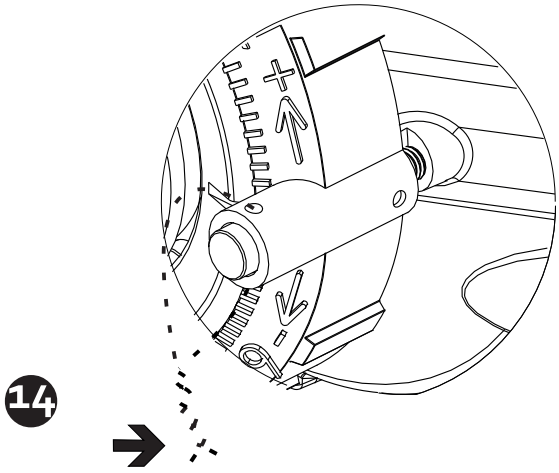

14

13

# DKH 512 DN25/32 LF

IMI TA

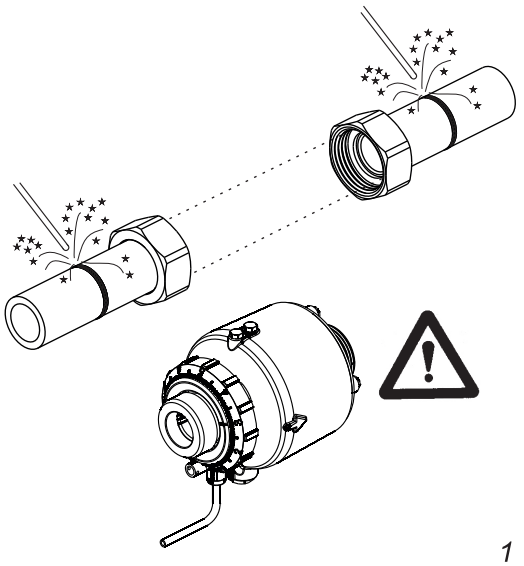

1

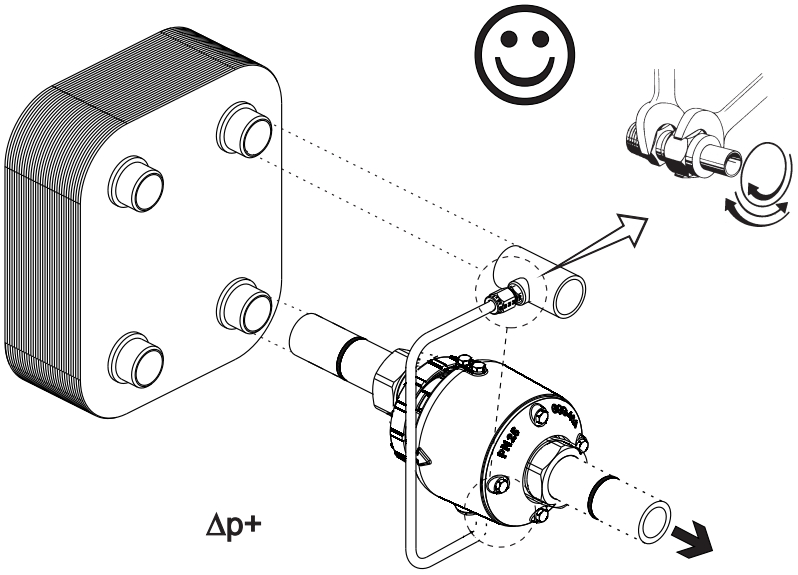


2

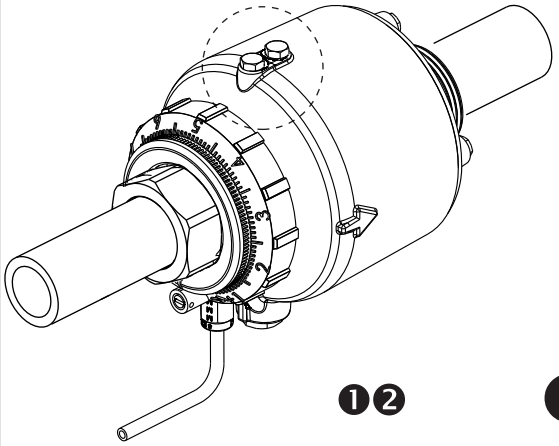

❶❷

SW 8

Max. 2 x 360°

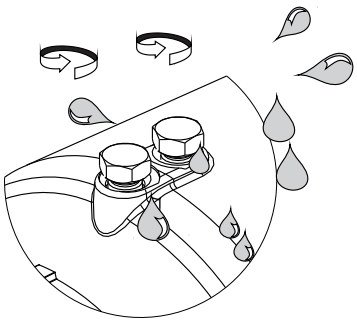

❶

Mp = 0,5 Nm

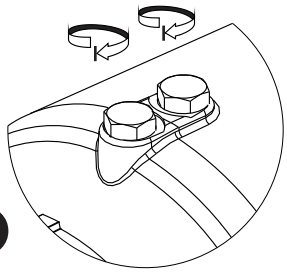

❷

3

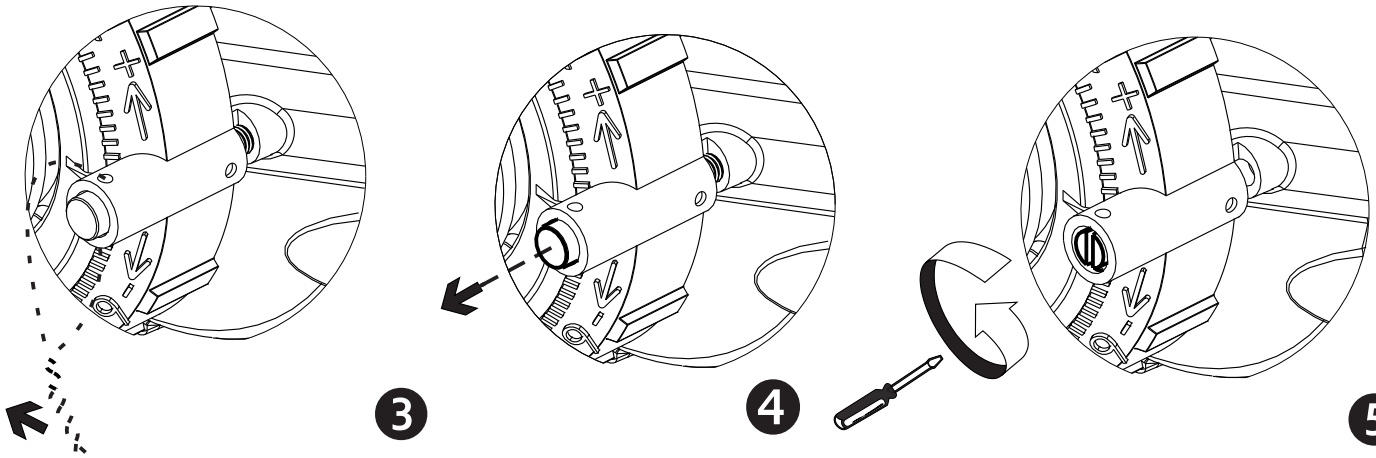

❸ ❹ ❺

4

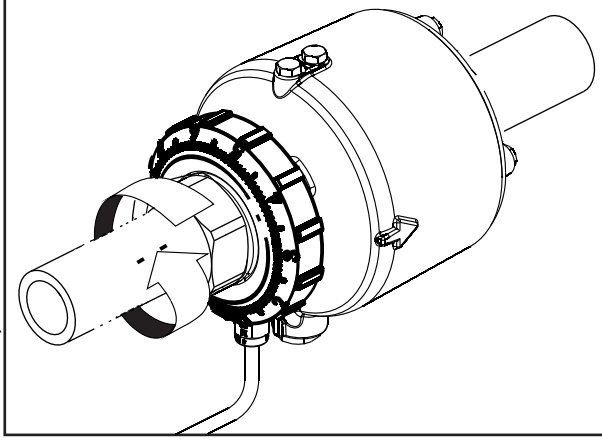

❻

5

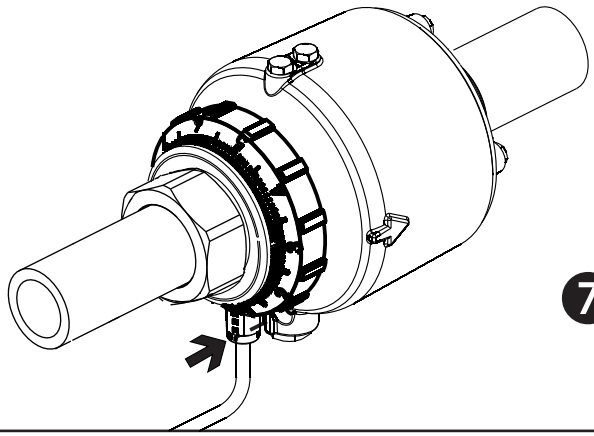

❼

6

Approved by:

13185 - Navodilo (smeško) DKH 512 DN25/32 LF by Jože Hočevar 19.06.2012 - Rev. A

\\Server\3. Razvoj\DESIGN\URADNO\OBDELAVA\299

# DKH 512 DN25/32 LF

IMI TA

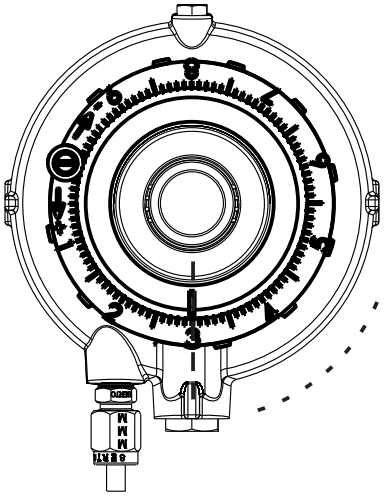

8

**DKH 512 DN 25/32 ; Fc=12** 8

| | Position of scale - Einstellung - Nastavitev | | | | | | | | | |
|---|---|---|---|---|---|---|---|---|---|---|
| | 0,0 | 1,0 | 2,0 | 3,0 | 4,0 | 5,0 | 6,0 | 7,0 | 8,0 | 9,0 |
| ,0 | 0 | 271 | 873 | 1464 | 1970 | 2445 | 2880 | 3169 | 3404 | 3554 |
| ,1 | 27 | 331 | 932 | 1515 | 2018 | 2489 | 2909 | 3193 | 3419 | 3560 |
| ,2 | 54 | 391 | 991 | 1565 | 2065 | 2532 | 2938 | 3216 | 3434 | 3565 |
| ,3 | 81 | 452 | 1050 | 1616 | 2113 | 2576 | 2967 | 3240 | 3449 | 3571 |
| ,4 | 108 | 512 | 1109 | 1666 | 2160 | 2619 | 2996 | 3263 | 3464 | 3576 |
| ,5 | 136 | 572 | 1169 | 1717 | 2208 | 2663 | 3025 | 3287 | 3479 | 3582 |
| ,6 | 163 | 632 | 1228 | 1768 | 2255 | 2706 | 3053 | 3310 | 3494 | 3587 |
| ,7 | 190 | 692 | 1287 | 1818 | 2303 | 2750 | 3082 | 3334 | 3509 | 3593 |
| ,8 | 217 | 753 | 1346 | 1869 | 2350 | 2793 | 3111 | 3357 | 3524 | 3598 |
| ,9 | 244 | 813 | 1405 | 1919 | 2398 | 2837 | 3140 | 3381 | 3539 | 3604 |
| | Flow - Volumenstrom - Pretok (l/h) | | | | | | | | | |

7

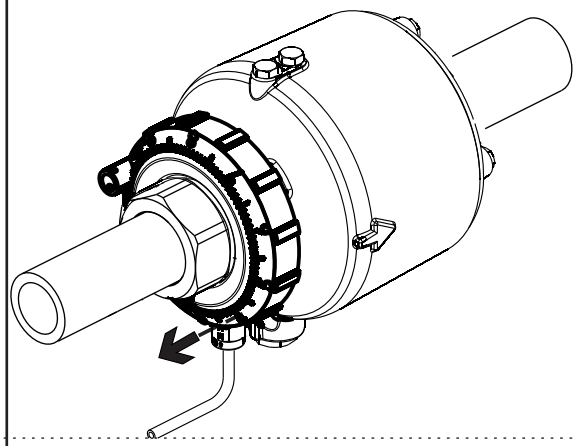

9

8

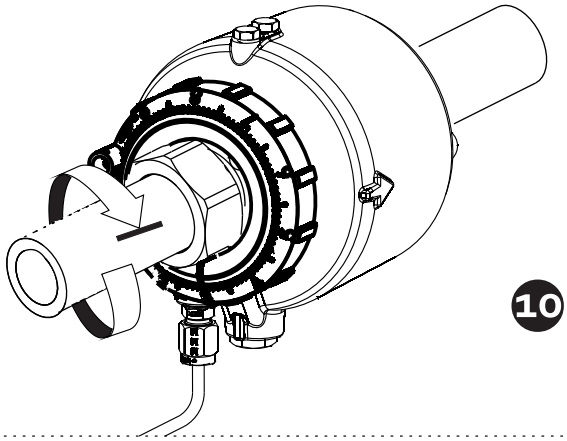

10

9

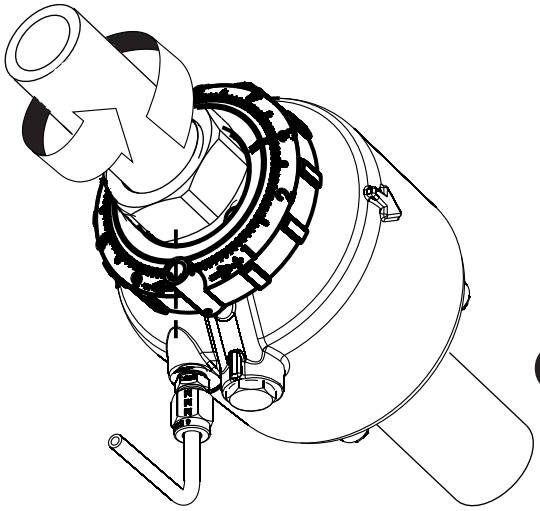

11

10

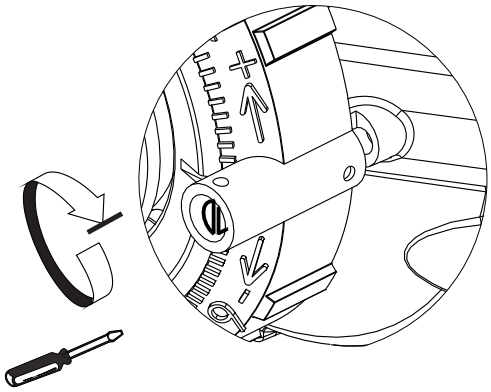

12

11

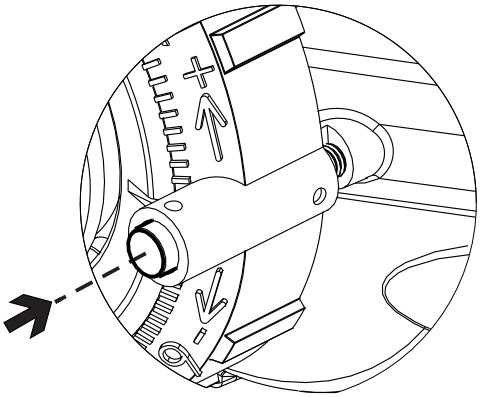

13

12

14

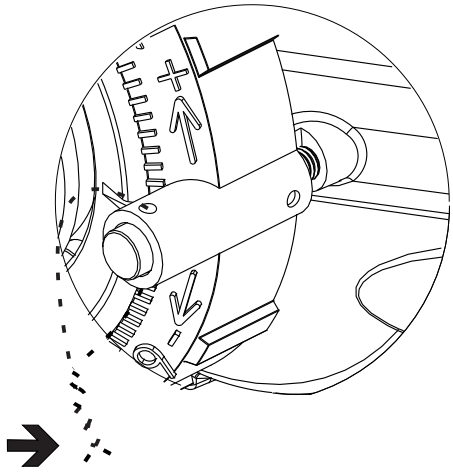

13

# DKH 512 DN25/32 NF

IMI TA

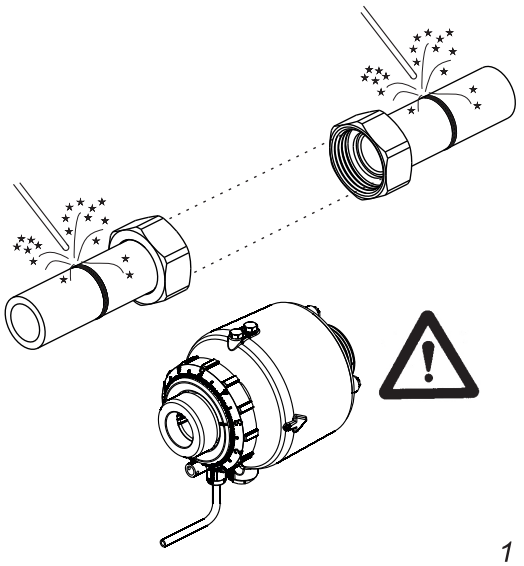

1

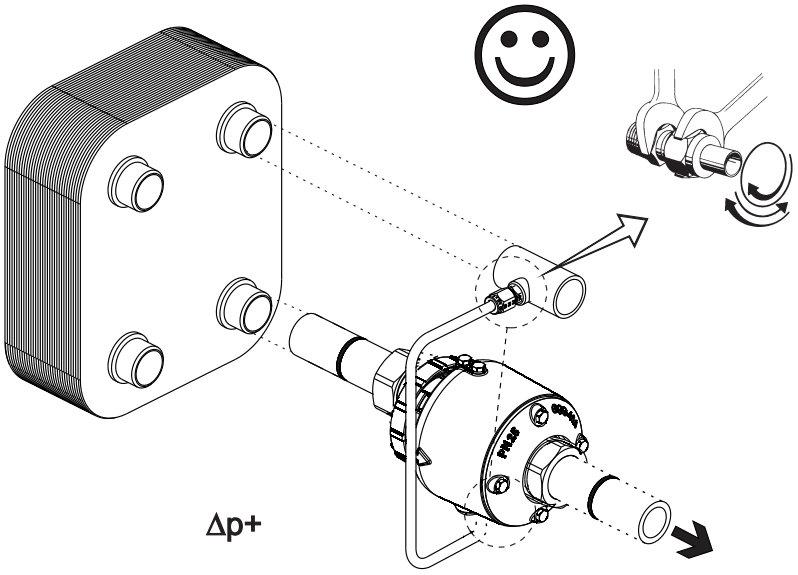


2

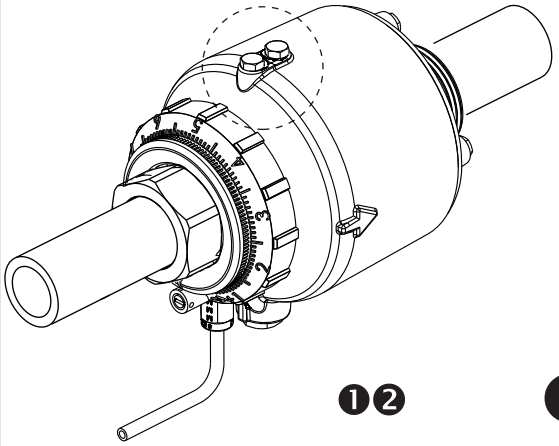

❶❷

SW 8

Max. 2 x 360°

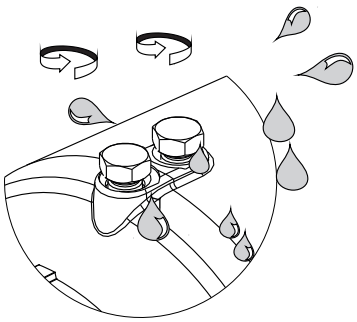

❶

Mp = 0,5 Nm

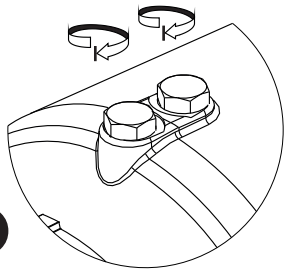

❷

3

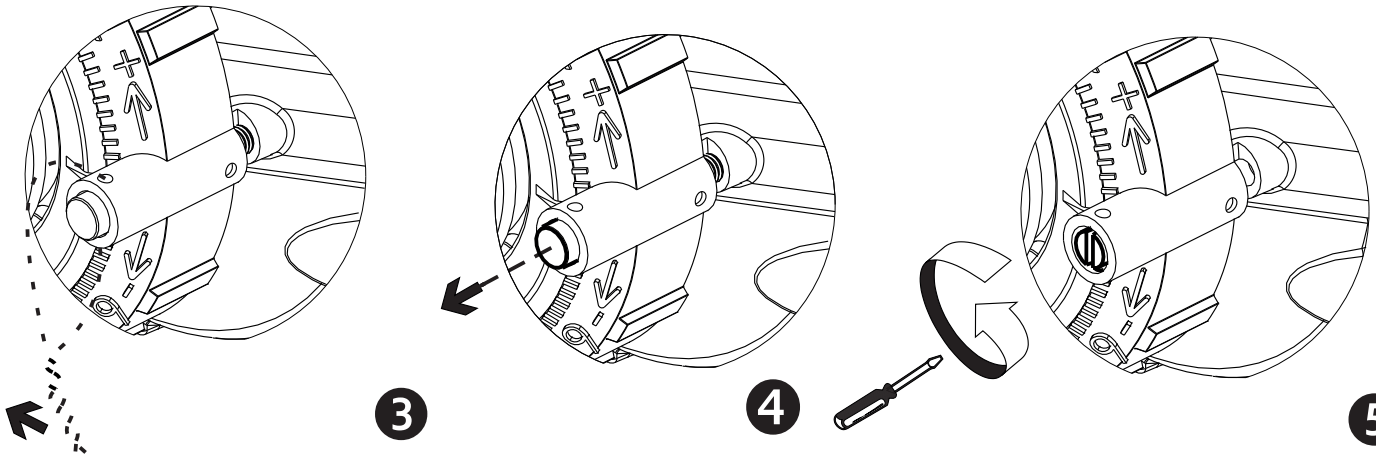

❸ ❹ ❺

4

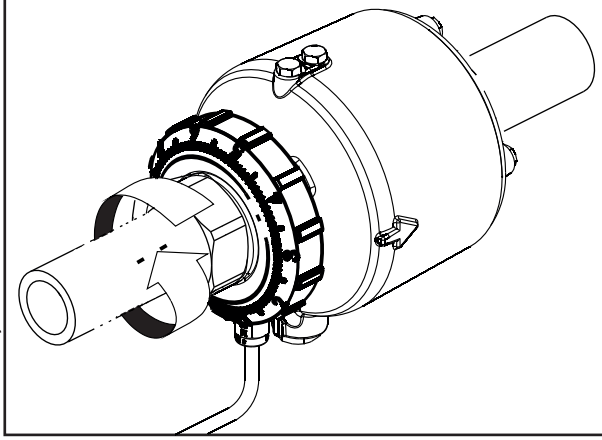

❻

5

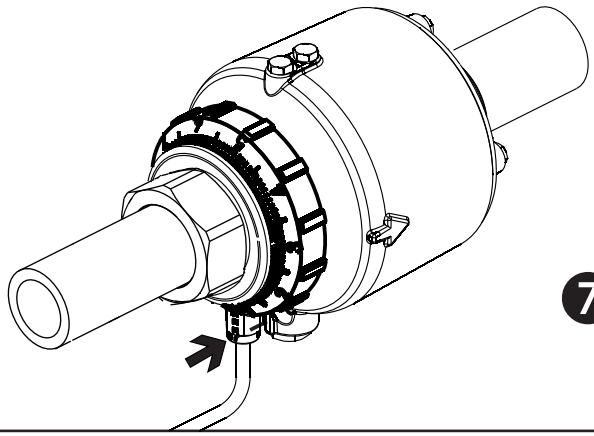

❼

6

Approved by:

13186 - Navodilo (smeško) DKH 512 DN25/32 NF by Jože Hočevar 19.06.2012 - Rev. A

\\Server\3. Razvoj\DESIGN\URADNO\OBDELAVA\299

# DKH 512 DN25/32 NF

IMI TA

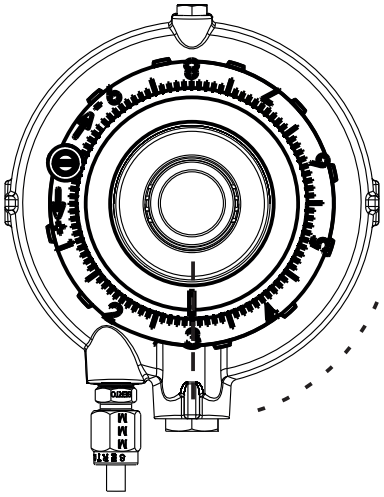

8

**DKH 512 DN 25/32 ; Fc=20**

8

| Position of scale-Einstellung-Nastavitev | | | | | | | | | | |
|---|---|---|---|---|---|---|---|---|---|---|
| | 0,0 | 1,0 | 2,0 | 3,0 | 4,0 | 5,0 | 6,0 | 7,0 | 8,0 | 9,0 |
| ,0 | 0 | 231 | 954 | 1688 | 2366 | 3032 | 3557 | 3922 | 4230 | 4387 |
| ,1 | 23 | 303 | 1027 | 1756 | 2433 | 3085 | 3594 | 3953 | 4246 | 4394 |
| ,2 | 46 | 376 | 1101 | 1824 | 2499 | 3137 | 3630 | 3984 | 4261 | 4401 |
| ,3 | 69 | 448 | 1174 | 1891 | 2566 | 3190 | 3667 | 4014 | 4277 | 4408 |
| ,4 | 92 | 520 | 1248 | 1959 | 2632 | 3242 | 3703 | 4045 | 4293 | 4415 |
| ,5 | 116 | 593 | 1321 | 2027 | 2699 | 3295 | 3740 | 4076 | 4309 | 4422 |
| ,6 | 139 | 665 | 1394 | 2095 | 2766 | 3347 | 3776 | 4107 | 4324 | 4428 |
| ,7 | 162 | 737 | 1468 | 2163 | 2832 | 3400 | 3813 | 4138 | 4340 | 4435 |
| ,8 | 185 | 809 | 1541 | 2230 | 2899 | 3452 | 3849 | 4168 | 4356 | 4442 |
| ,9 | 208 | 882 | 1615 | 2298 | 2965 | 3505 | 3886 | 4199 | 4371 | 4449 |
| Flow - Volumenstrom - Pretok (l/h) | | | | | | | | | | |

7

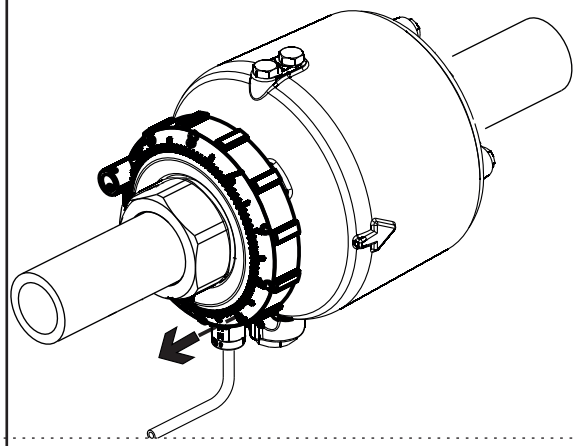

9

8

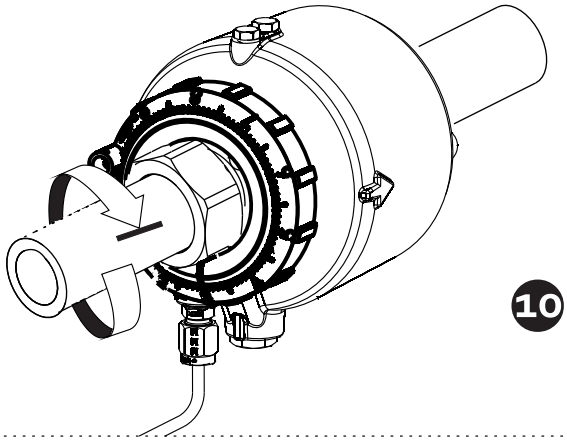

10

9

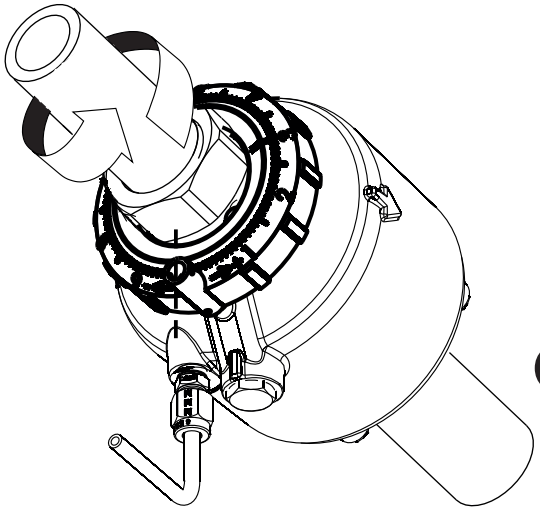

11

10

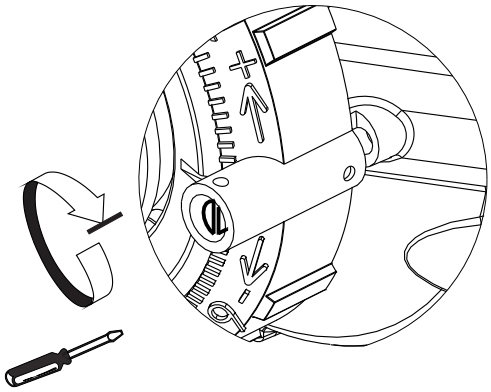

12

11

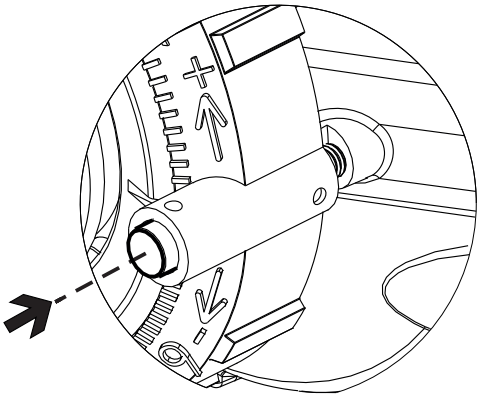

13

12

14

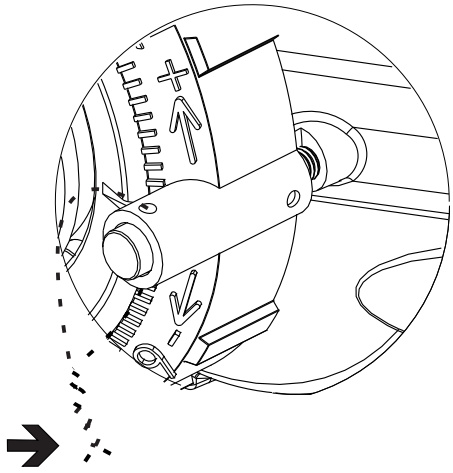

13

# DKH 512 DN25/32 HF

IMI TA

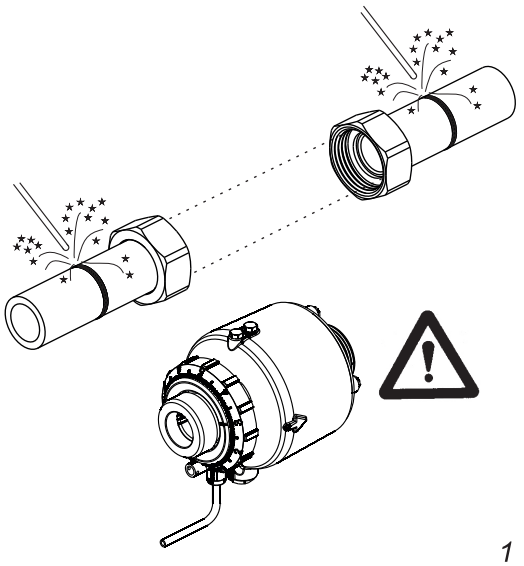

1

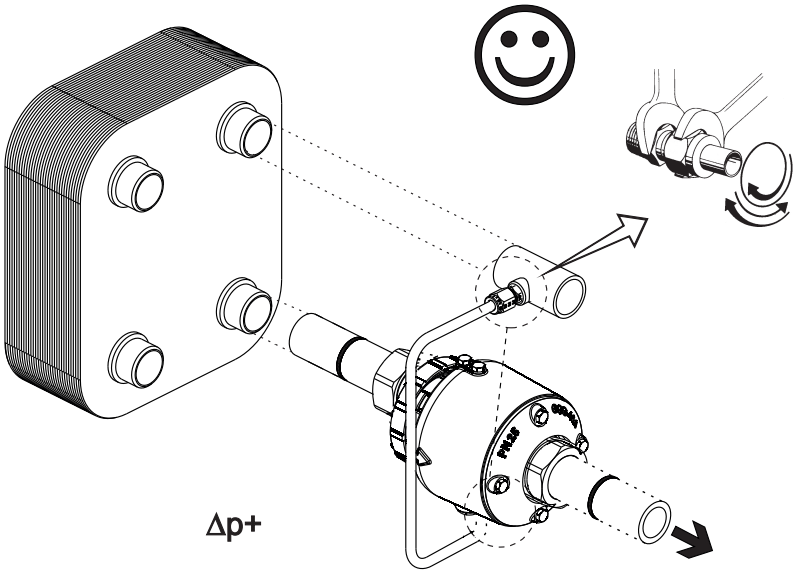


2

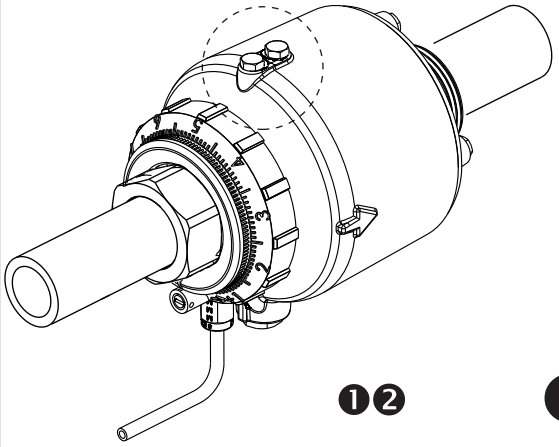

❶❷

SW 8

Max. 2 x 360°

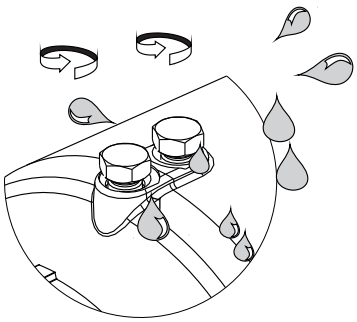

❶

Mp = 0,5 Nm

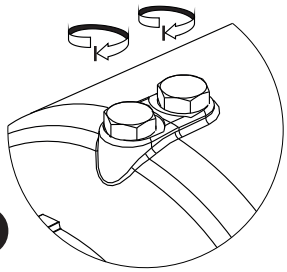

❷

3

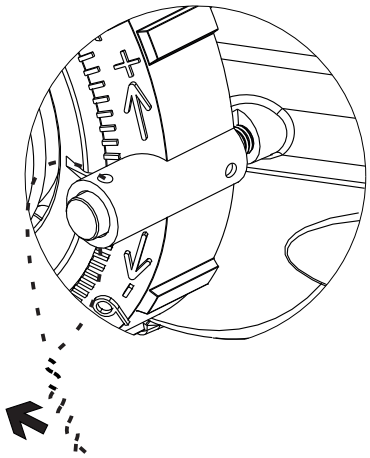

❸

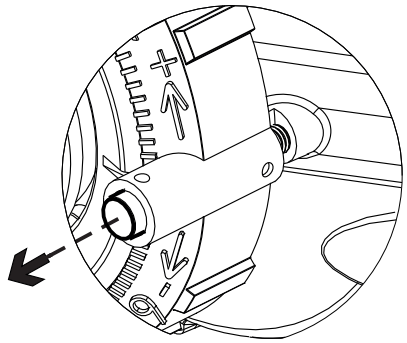

❹

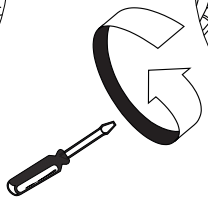

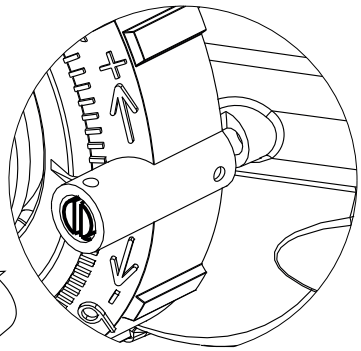

❺

4

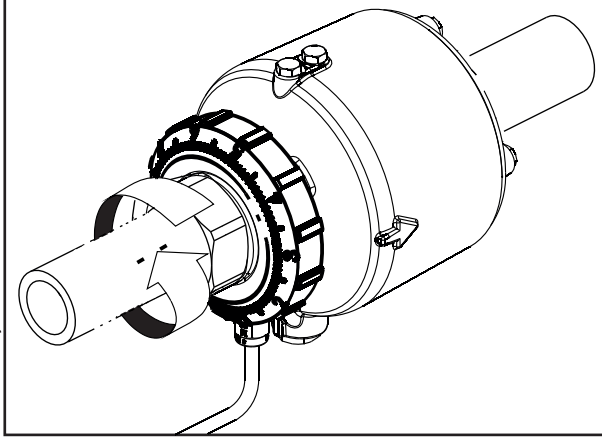

❻

5

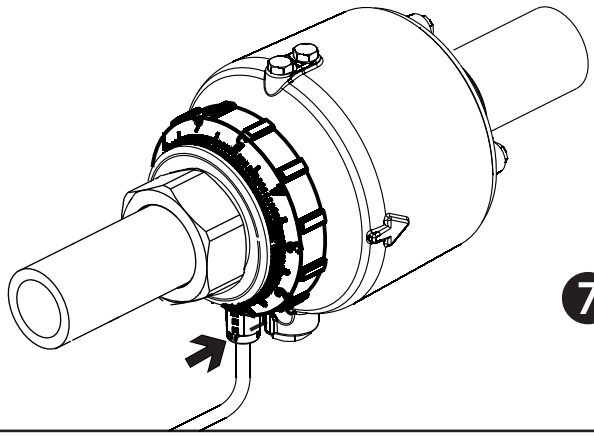

❼

6

Approved by:

13187 - Navodilo (smeško) DKH 512 DN25/32 HF by Jože Hočevar 19.06.2012 - Rev. A

\\Server\3. Razvoj\DESIGN\URADNO\OBDELAVA\299

# DKH 512 DN25/32 HF

IMI TA

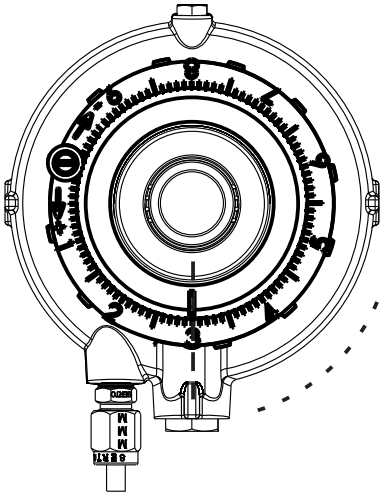

8

3

**DKH 512 DN 25/32 ; Fc=40**

Position of scale-Einstellung-Nastavitev

| | 0,0 | 1,0 | 2,0 | 3,0 | 4,0 | 5,0 | 6,0 | 7,0 | 8,0 | 9,0 |
|---|---|---|---|---|---|---|---|---|---|---|
| ,0 | 0 | 728 | 1780 | 2886 | 3708 | 4615 | 5264 | 5734 | 6077 | 6121 |
| ,1 | 73 | 833 | 1891 | 2968 | 3799 | 4680 | 5311 | 5768 | 6081 | 6122 |
| ,2 | 146 | 938 | 2001 | 3050 | 3889 | 4745 | 5358 | 5803 | 6086 | 6123 |
| ,3 | 218 | 1044 | 2112 | 3133 | 3980 | 4810 | 5405 | 5837 | 6090 | 6124 |
| ,4 | 291 | 1149 | 2222 | 3215 | 4071 | 4875 | 5452 | 5871 | 6095 | 6125 |
| ,5 | 364 | 1254 | 2333 | 3297 | 4162 | 4940 | 5499 | 5906 | 6099 | 6127 |
| ,6 | 437 | 1359 | 2444 | 3379 | 4252 | 5004 | 5546 | 5940 | 6103 | 6128 |
| ,7 | 510 | 1464 | 2554 | 3461 | 4343 | 5069 | 5593 | 5974 | 6108 | 6129 |
| ,8 | 582 | 1570 | 2665 | 3544 | 4434 | 5134 | 5640 | 6008 | 6112 | 6130 |
| ,9 | 655 | 1675 | 2775 | 3626 | 4524 | 5199 | 5687 | 6043 | 6117 | 6131 |

Flow - Volumenstrom - Pretok (l/h)

7

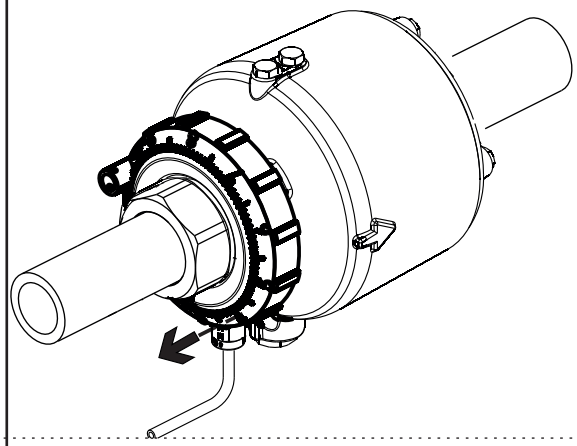

9

8

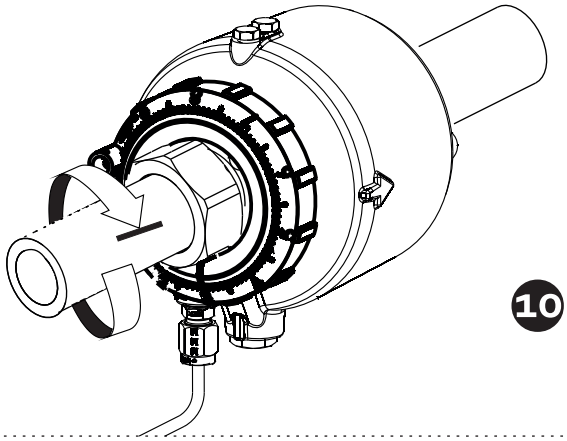

10

9

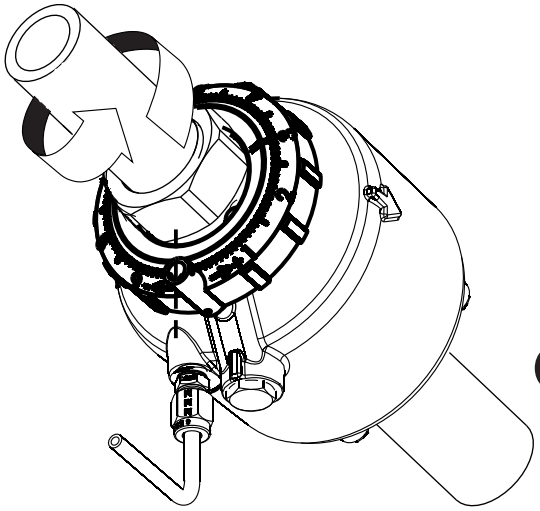

11

10

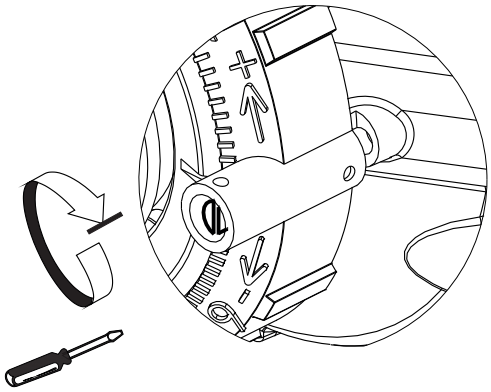

12

11

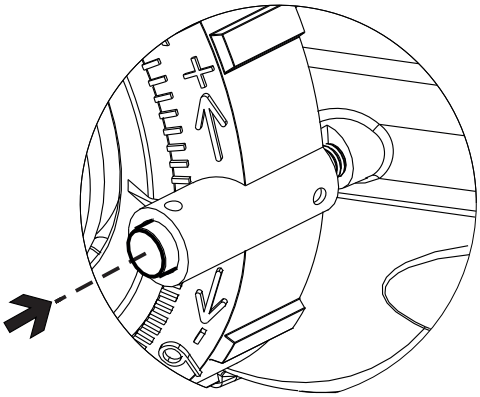

13

12

14

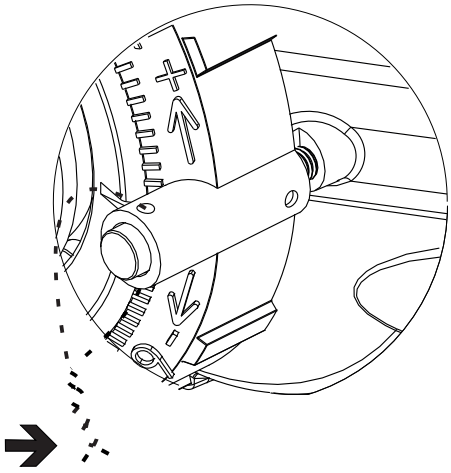

13

# DKH 512 DN40,50 LF

IMI TA

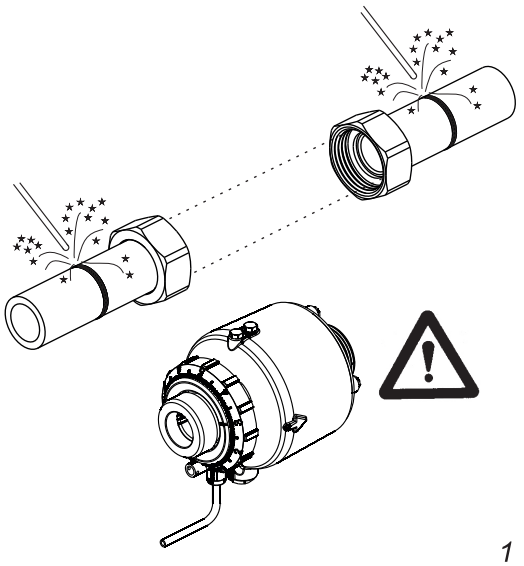

1

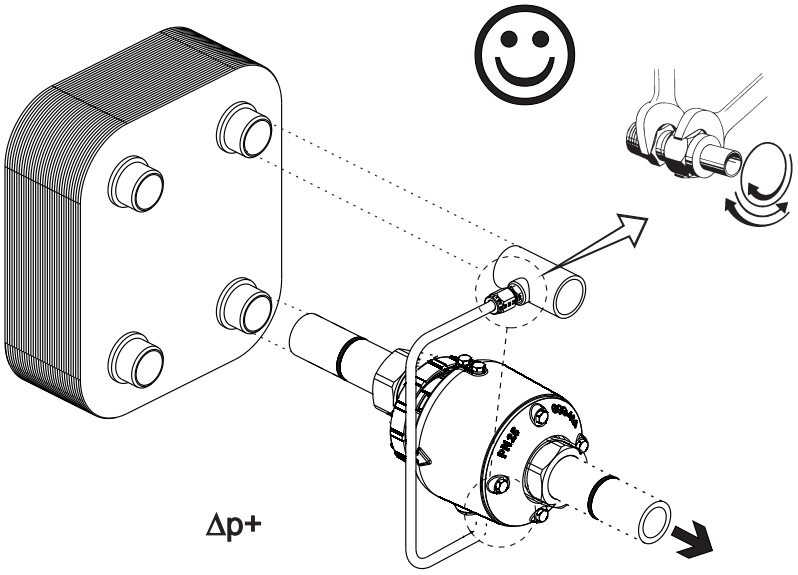


2

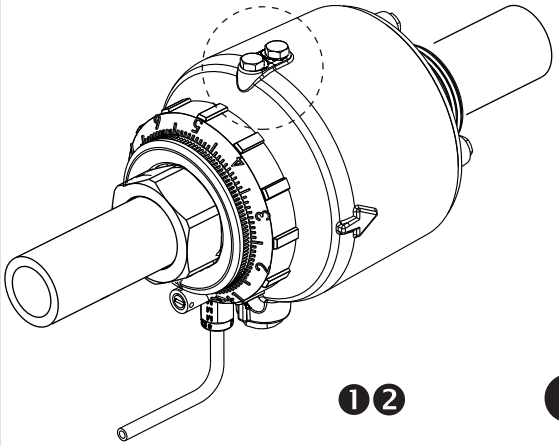

❶❷

SW 8

Max. 2 x 360°

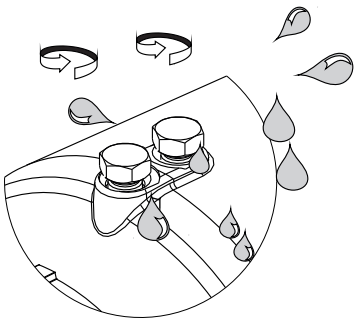

❶

Mp = 0,5 Nm

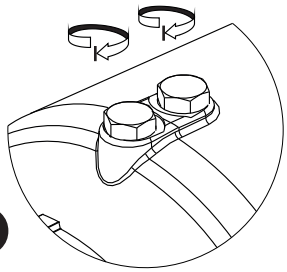

❷

3

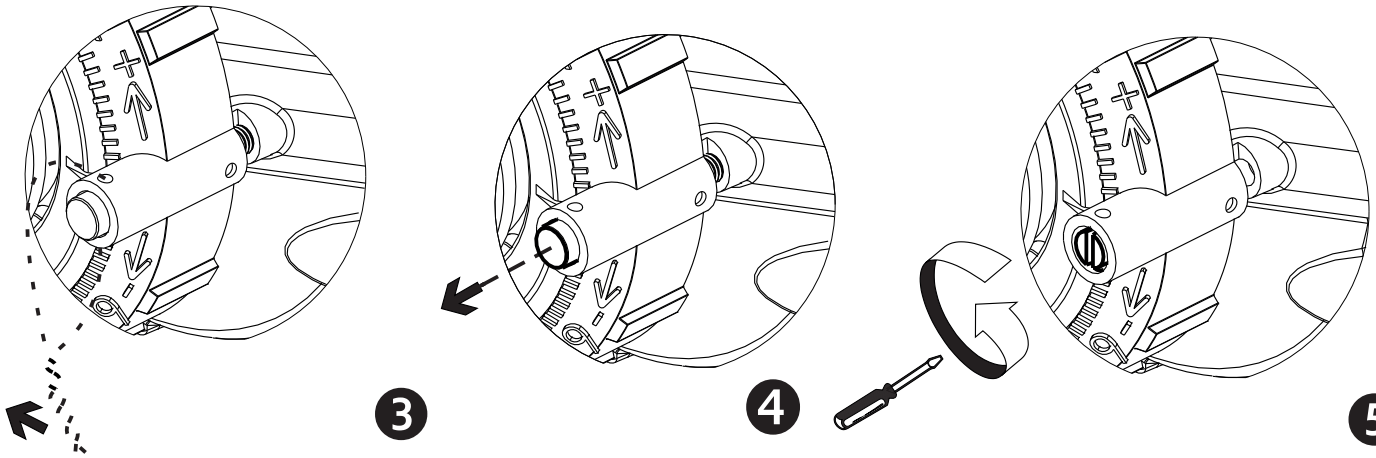

❸ ❹ ❺

4

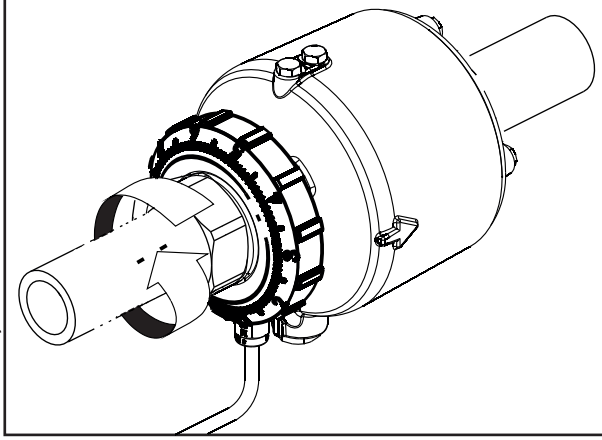

❻

5

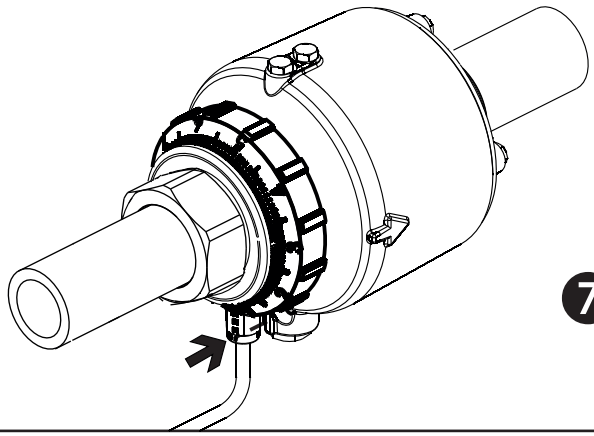

❼

6

Approved by:

13188 - Navodilo (smeško) DKH 512 DN40,50 LF by Jože Hočevar 19.06.2012 - Rev. A

\\Server\3. Razvoj\DESIGN\URADNO\OBDELAVA\299

# DKH 512 DN40,50 LF

IMI TA

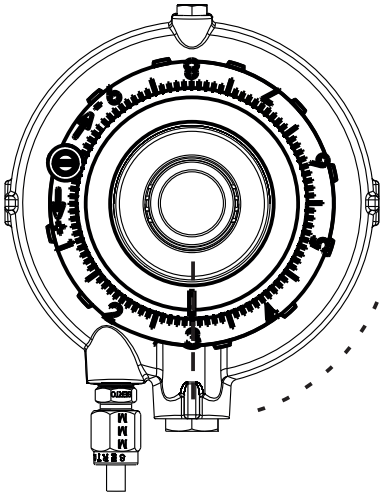

8

**DKH 512 DN 40/50 ; Fc=12** 8

| Position of scale - Einstellung - Nastavitev | | | | | | | | | | |
|---|---|---|---|---|---|---|---|---|---|---|
| | 0,0 | 1,0 | 2,0 | 3,0 | 4,0 | 5,0 | 6,0 | 7,0 | 8,0 | 9,0 |
| ,0 | 0 | 337 | 1509 | 2791 | 4106 | 5430 | 6587 | 7579 | 8089 | 8172 |
| ,1 | 34 | 454 | 1637 | 2923 | 4238 | 5546 | 6686 | 7630 | 8097 | 8174 |
| ,2 | 67 | 571 | 1765 | 3054 | 4371 | 5661 | 6785 | 7681 | 8106 | 8176 |
| ,3 | 101 | 689 | 1894 | 3186 | 4503 | 5777 | 6885 | 7732 | 8114 | 8178 |
| ,4 | 135 | 806 | 2022 | 3317 | 4636 | 5893 | 6984 | 7783 | 8122 | 8180 |
| ,5 | 169 | 923 | 2150 | 3449 | 4768 | 6009 | 7083 | 7834 | 8131 | 8182 |
| ,6 | 202 | 1040 | 2278 | 3580 | 4900 | 6124 | 7182 | 7885 | 8139 | 8184 |
| ,7 | 236 | 1157 | 2406 | 3712 | 5033 | 6240 | 7281 | 7936 | 8147 | 8186 |
| ,8 | 270 | 1275 | 2535 | 3843 | 5165 | 6356 | 7381 | 7987 | 8155 | 8188 |
| ,9 | 303 | 1392 | 2663 | 3975 | 5298 | 6471 | 7480 | 8038 | 8164 | 8190 |
| Flow - Volumenstrom - Pretok (l/h) | | | | | | | | | | |

7

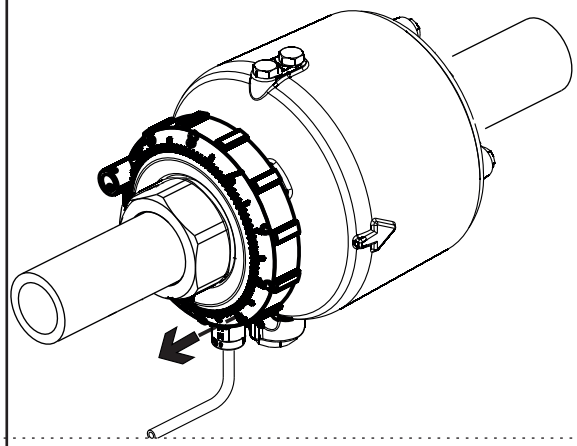

9

8

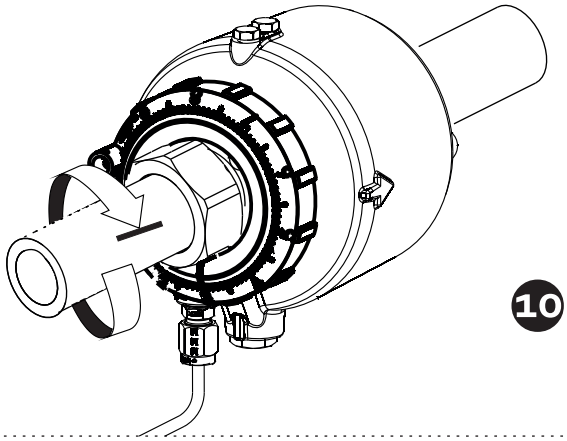

10

9

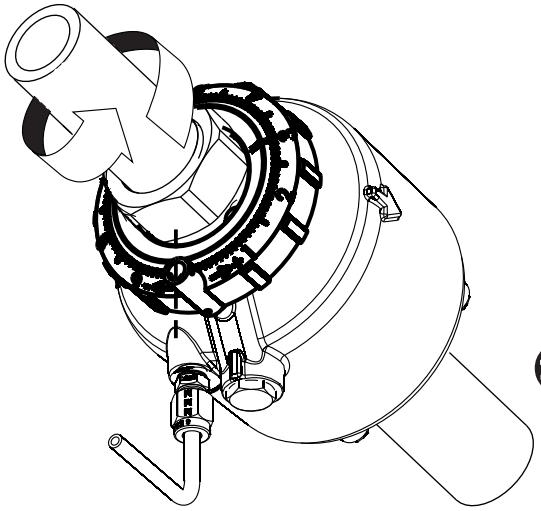

11

10

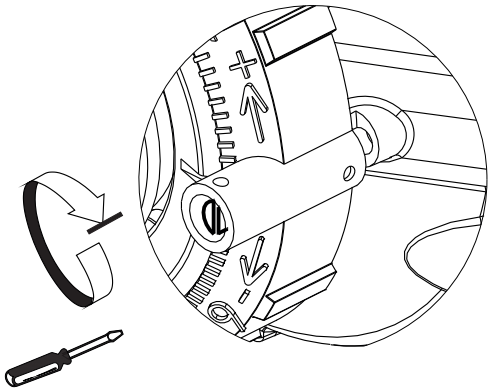

12

11

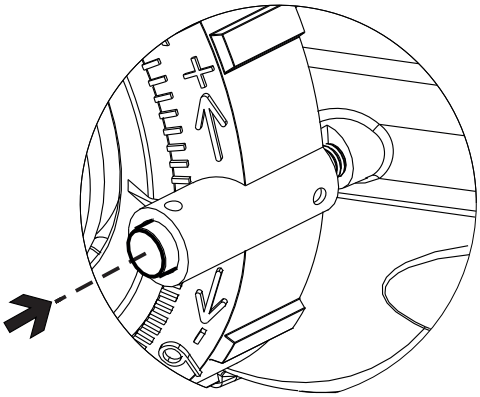

13

12

14

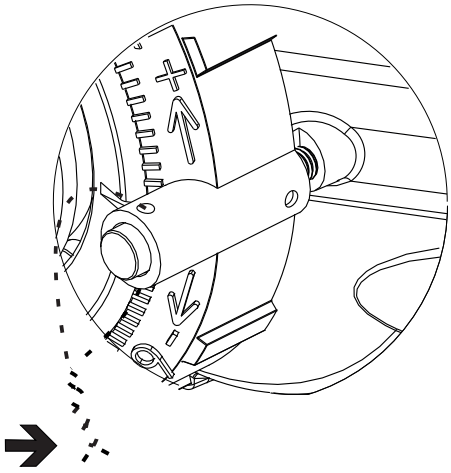

13

# DKH 512 DN40/50 NF

IMI TA

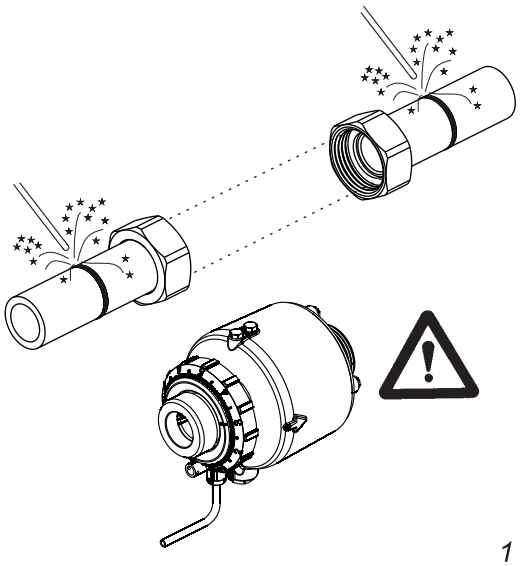

1

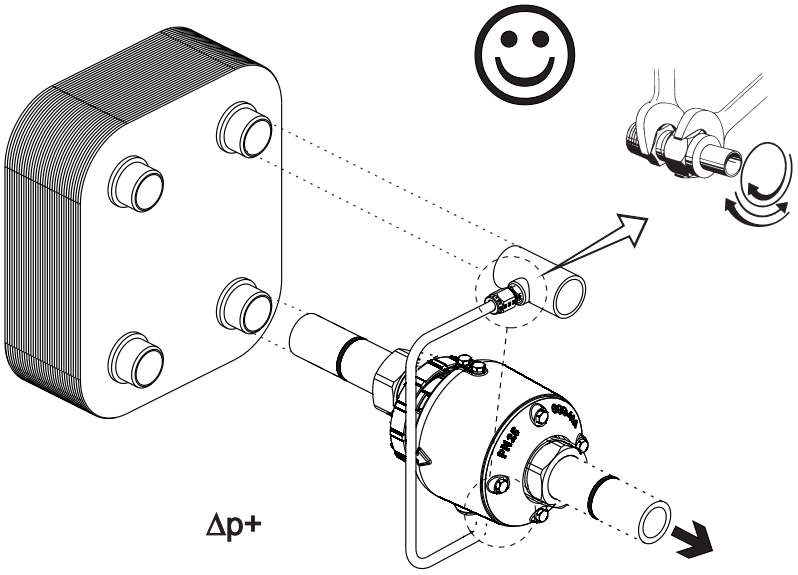


2

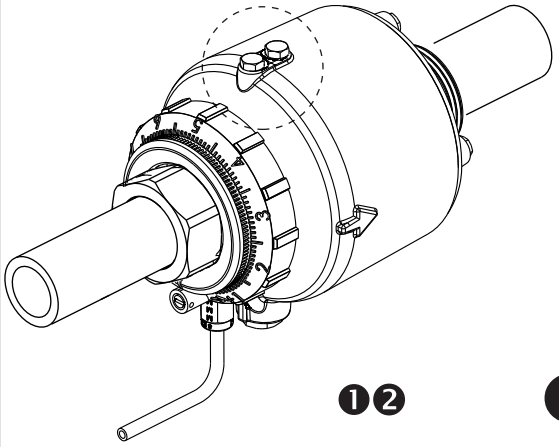

❶❷

SW 8

Max. 2 x 360°

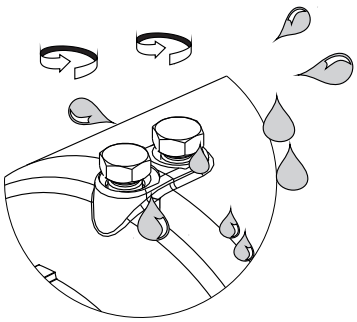

❶

Mp = 0,5 Nm

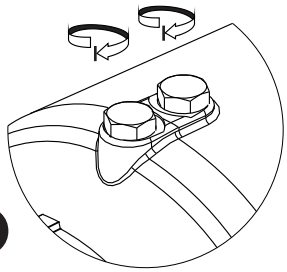

❷

3

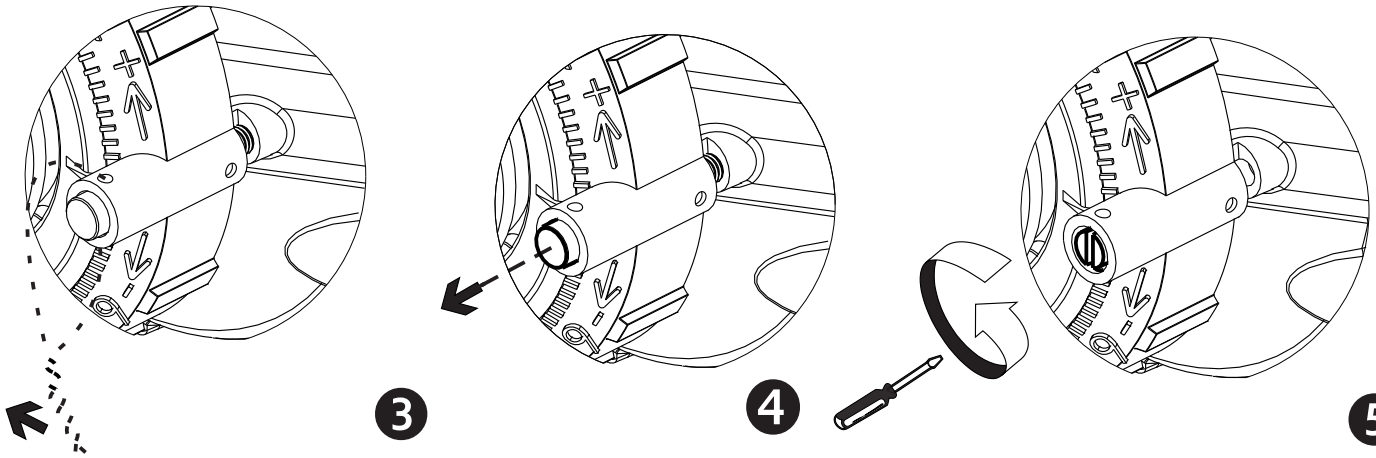

❸ ❹ ❺

4

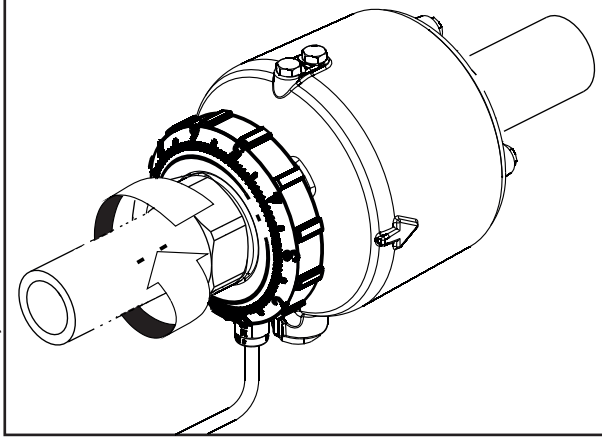

❻

5

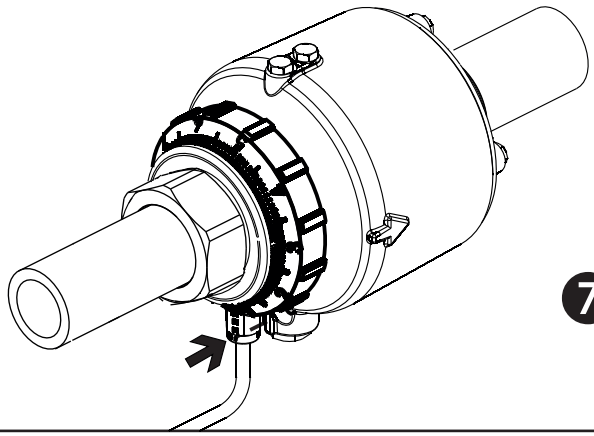

❼

6

Approved by:

13189 - Navodilo (smeško) DKH 512 DN40/50 NF by Jože Hočevar 19.06.2012 - Rev. A

\\Server\3. Razvoj\DESIGN\URADNO\OBDELAVA\299

# DKH 512 DN40/50 NF

IMI TA

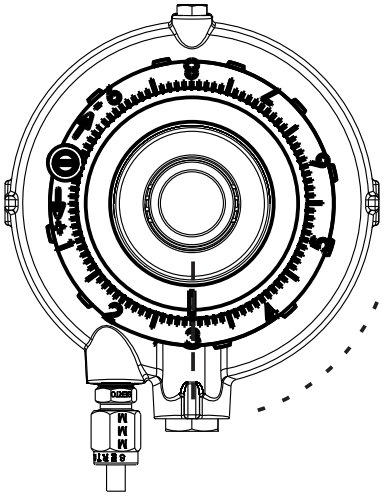

8

**DKH 512 DN 40/50 ; Fc=20** 8

| Position of scale - Einstellung - Nastavitev | | | | | | | | | | |
|---|---|---|---|---|---|---|---|---|---|---|
| | 0,0 | 1,0 | 2,0 | 3,0 | 4,0 | 5,0 | 6,0 | 7,0 | 8,0 | 9,0 |
| ,0 | 7 | 284 | 1329 | 2700 | 4406 | 5779 | 7409 | 8786 | 9869 | 10712 |
| ,1 | 35 | 389 | 1467 | 2873 | 4548 | 5942 | 7546 | 8890 | 9950 | 10726 |
| ,2 | 62 | 493 | 1605 | 3044 | 4681 | 6101 | 7685 | 9001 | 10034 | 10740 |
| ,3 | 90 | 598 | 1744 | 3216 | 4823 | 6267 | 7822 | 9112 | 10119 | 10753 |
| ,4 | 118 | 706 | 1872 | 3384 | 4956 | 6433 | 7964 | 9218 | 10204 | 10767 |
| ,5 | 146 | 807 | 2015 | 3555 | 5098 | 6594 | 8098 | 9324 | 10289 | 10781 |
| ,6 | 173 | 911 | 2152 | 3725 | 5230 | 6754 | 8232 | 9435 | 10373 | 10795 |
| ,7 | 201 | 1017 | 2289 | 3896 | 5368 | 6920 | 8371 | 9541 | 10458 | 10809 |
| ,8 | 229 | 1120 | 2425 | 4063 | 5505 | 7086 | 8511 | 9647 | 10543 | 10822 |
| ,9 | 256 | 1222 | 2563 | 4238 | 5642 | 7246 | 8648 | 9758 | 10627 | 10836 |
| Flow - Volumenstrom - Pretok (l/h) | | | | | | | | | | |

7

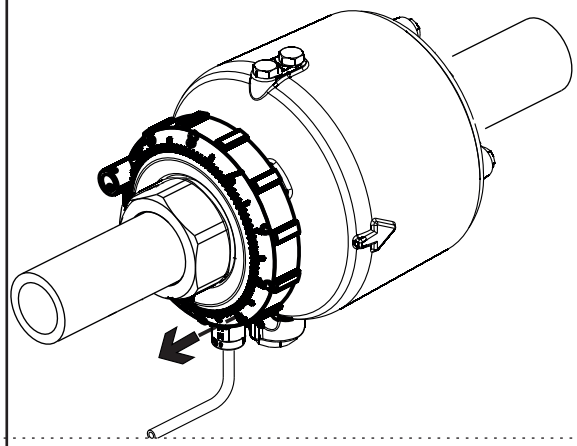

9

8

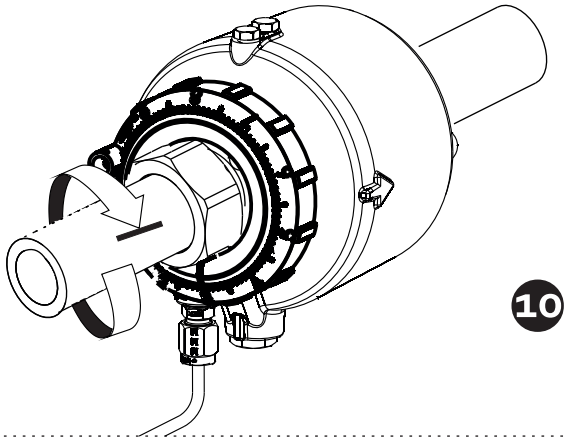

10

9

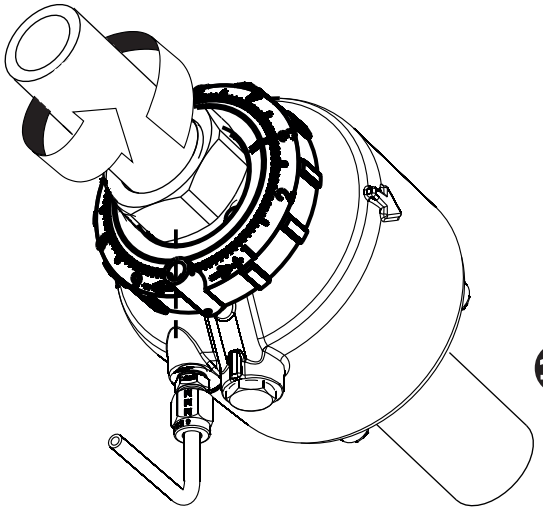

11

10

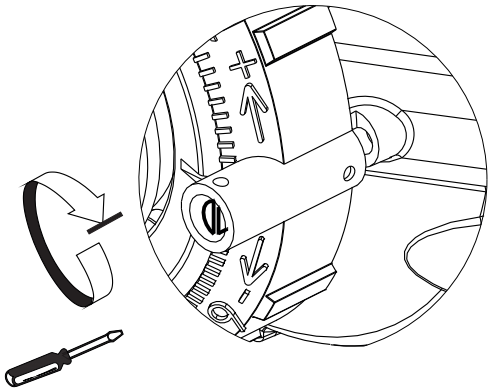

12

11

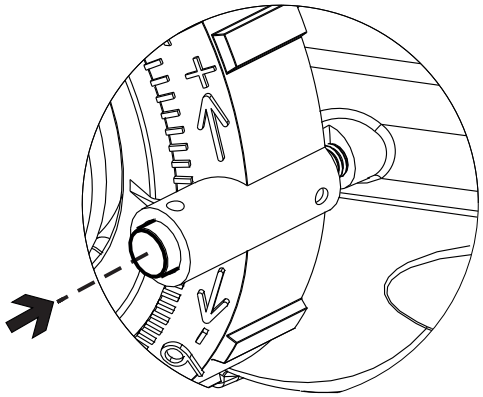

13

12

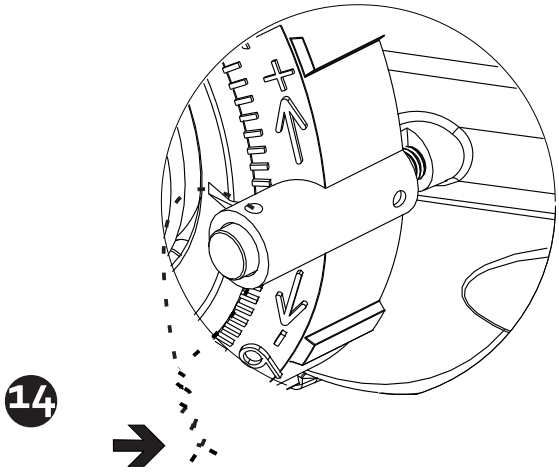

14

13

# DKH 512 DN40,50 HF

IMI TA

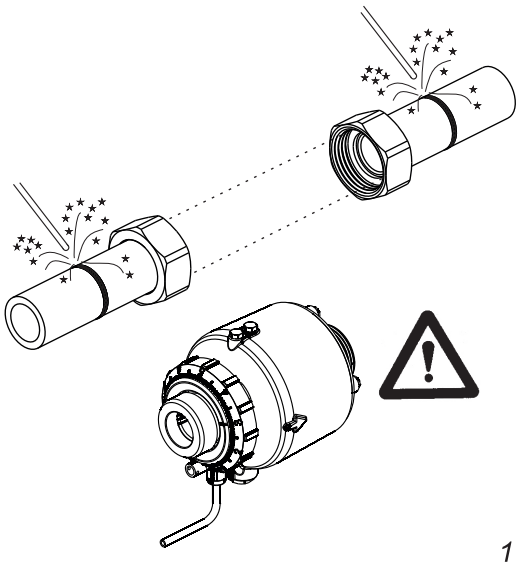

1

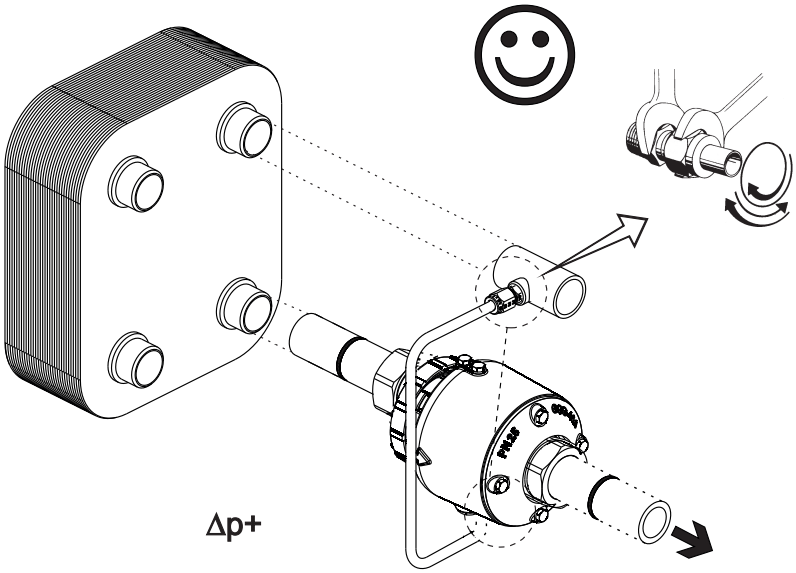


2

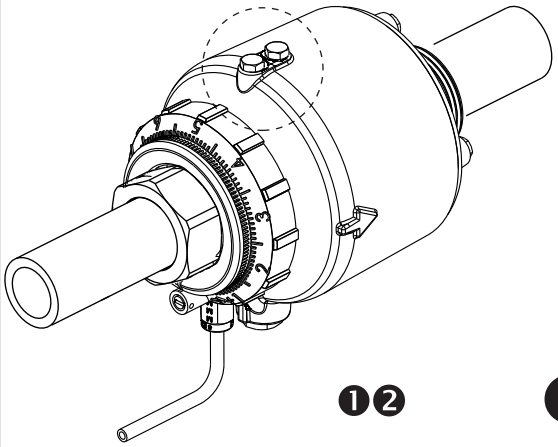

❶❷

SW 8

Max. 2 x 360°

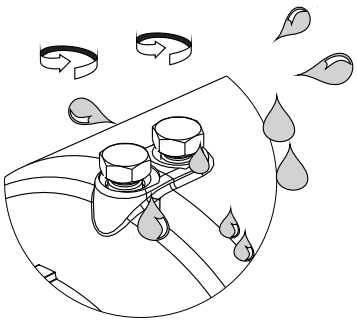

❶

Mp = 0,5 Nm

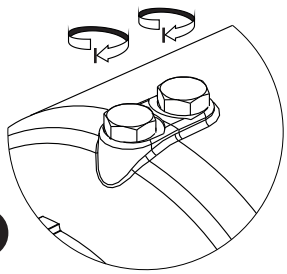

❷

3

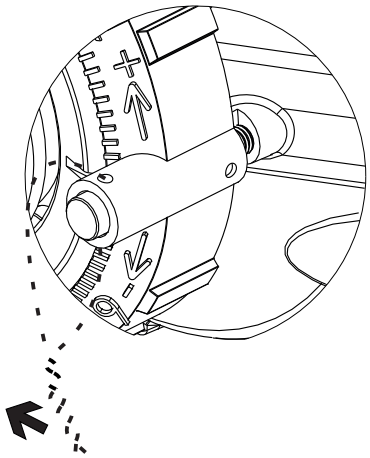

❸

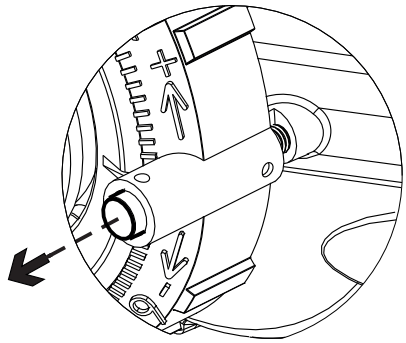

❹

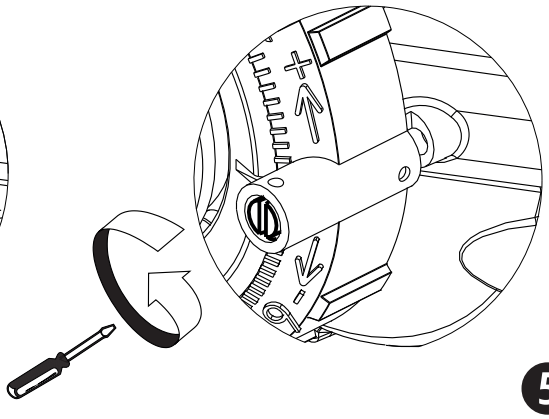

❺

4

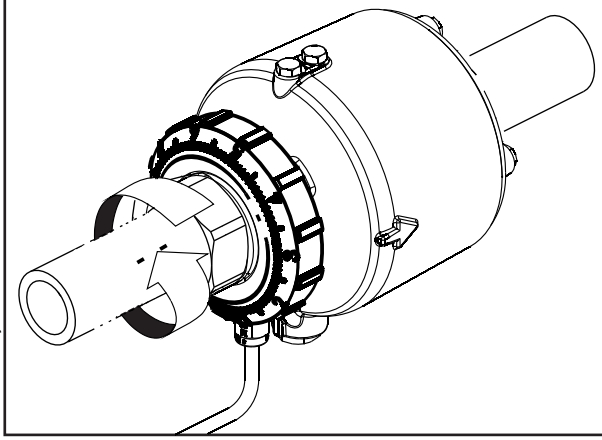

❻

5

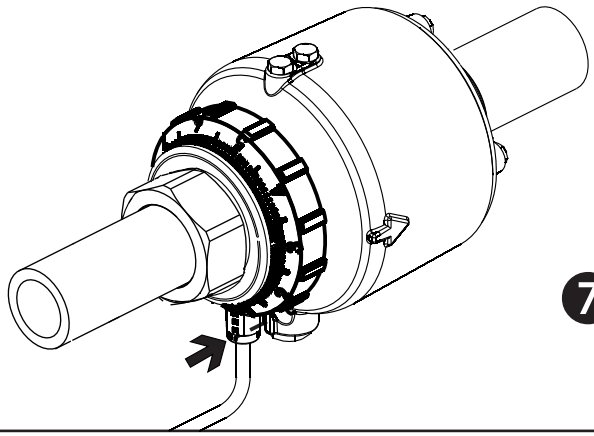

❼

6

Approved by:

13190 - Navodilo (smeško) DKH 512 DN40,50 HF by Jože Hočevar 19.06.2012 - Rev. A

\\Server\3. Razvoj\DESIGN\URADNO\OBDELAVA\299

# DKH 512 DN40,50 HF

IMI TA

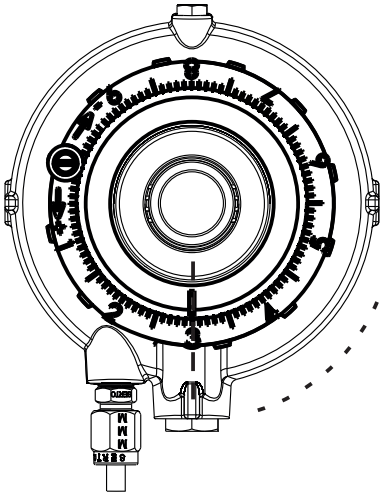

8

**DKH 512 DN 40/50 ; Fc=40** 8

| Position of scale - Einstellung - Nastavitev | | | | | | | | | | |
|---|---|---|---|---|---|---|---|---|---|---|
| | 0,0 | 1,0 | 2,0 | 3,0 | 4,0 | 5,0 | 6,0 | 7,0 | 8,0 | 9,0 |
| ,0 | 0 | 37 | 212 | 912 | 3150 | 5571 | 7920 | 10140 | 12228 | 13994 |
| ,1 | 4 | 55 | 282 | 1136 | 3392 | 5806 | 8142 | 10349 | 12405 | 14082 |
| ,2 | 7 | 72 | 352 | 1360 | 3634 | 6041 | 8364 | 10558 | 12581 | 14169 |
| ,3 | 11 | 90 | 422 | 1583 | 3876 | 6276 | 8586 | 10766 | 12758 | 14257 |
| ,4 | 15 | 107 | 492 | 1807 | 4118 | 6511 | 8808 | 10975 | 12934 | 14344 |
| ,5 | 19 | 125 | 562 | 2031 | 4361 | 6746 | 9030 | 11184 | 13111 | 14432 |
| ,6 | 22 | 142 | 632 | 2255 | 4603 | 6980 | 9252 | 11393 | 13288 | 14520 |
| ,7 | 26 | 160 | 702 | 2479 | 4845 | 7215 | 9474 | 11602 | 13464 | 14607 |
| ,8 | 30 | 177 | 772 | 2702 | 5087 | 7450 | 9696 | 11810 | 13641 | 14695 |
| ,9 | 33 | 195 | 842 | 2926 | 5329 | 7685 | 9918 | 12019 | 13817 | 14782 |
| Flow - Volumenstrom - Pretok (l/h) | | | | | | | | | | |

7

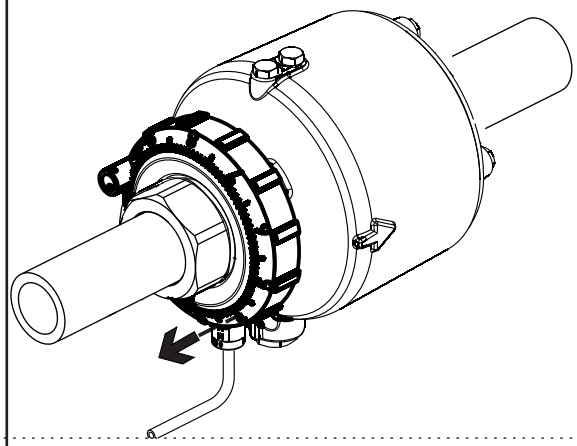

9

8

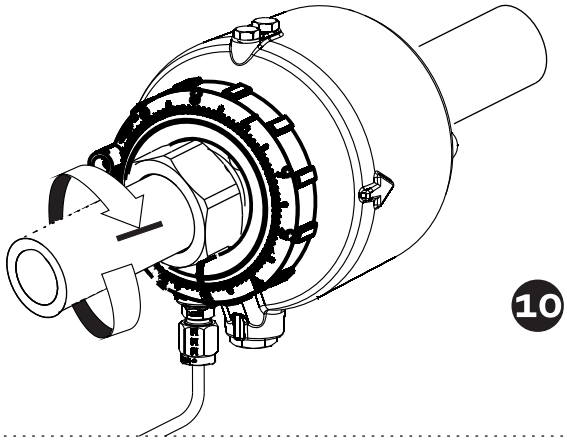

10

9

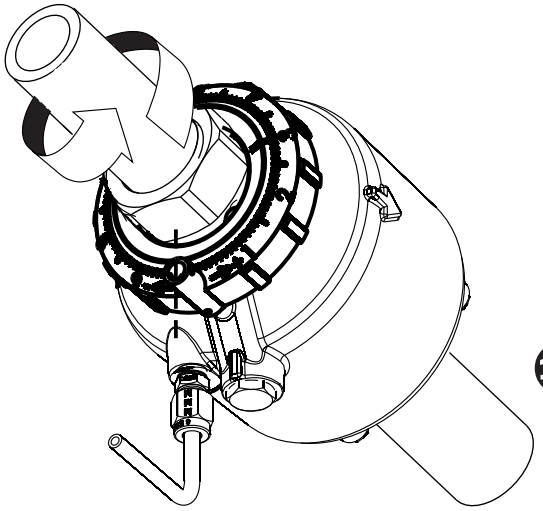

11

10

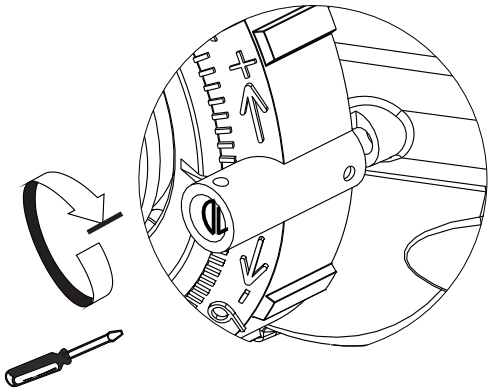

12

11

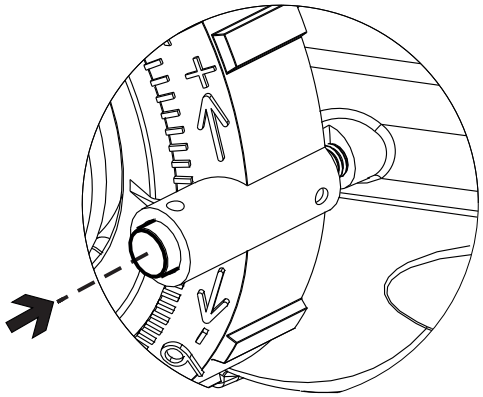

13

12

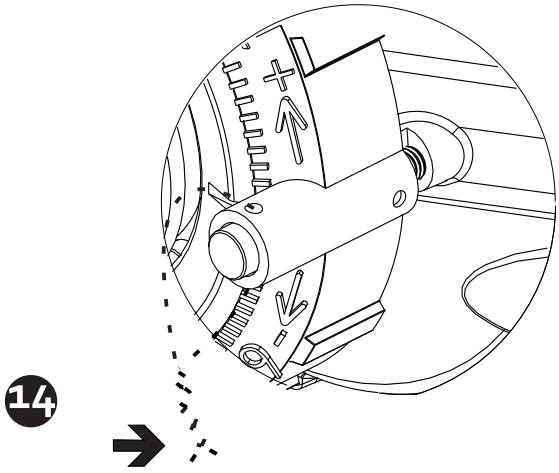

14

13

# DKH 512 DN65,80

IMI TA

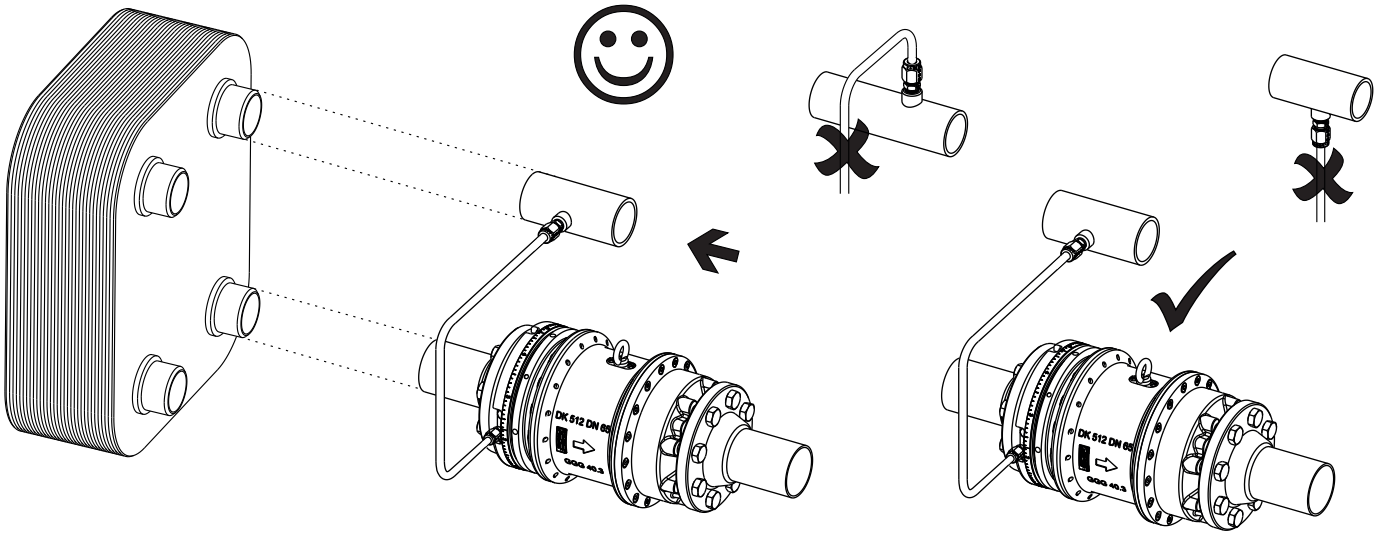


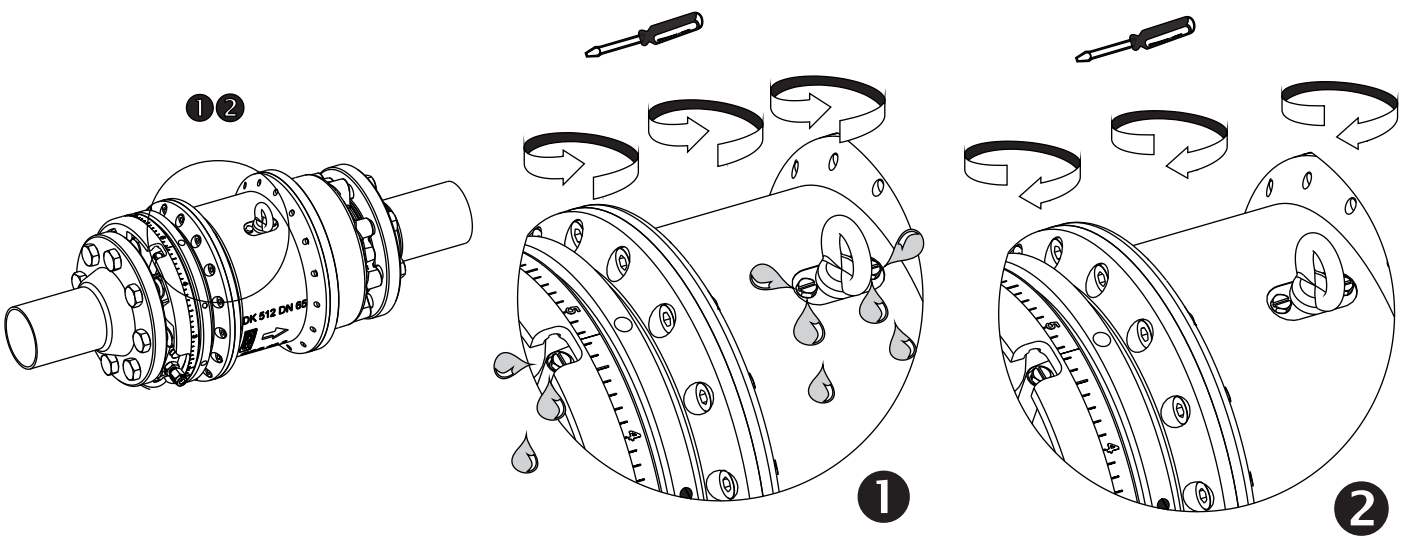


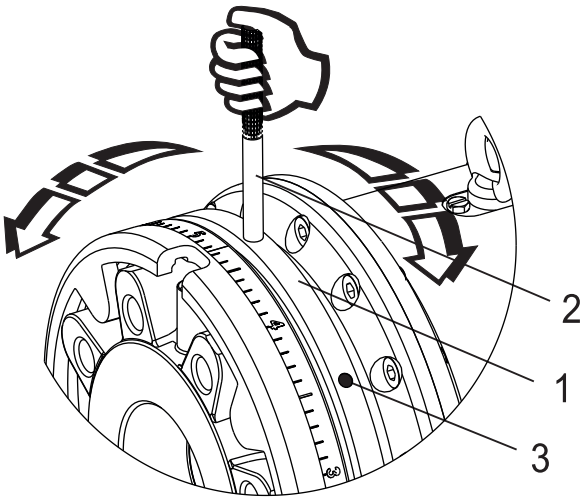


**FLOW ADJUSTMENT**

Define the designed maximum flow of the system.

Find the corresponding number from the flow chart (for example 3,5).

Adjust (screw or unscrew) the flow adjustment nut (1) using the stick (2) until the red pointer (3) is aligned with the corresponding number (for example 3,5).

The water flow has been measured on each individual valve in all positions of adjustment scale. Each valve has its own identity number and individual flow chart included in the scope of supply. The flow chart corresponds to water only. The copy of the chart for the water or other medium can be provided by supplier. Provide next data: medium, type, DN, Fc, serial number.

Approved by:

10757 - Navodilo (smeško) DKH 512 DN65,80 by Alen Jerman 21.06.12 - Rev. A

\\Server\3. Razvoj\DESIGN\URADNO\OBDELAVA\299