DA 516

Differential pressure controller with adjustable set-point

TA

Pressurisation & Water Quality › Balancing & Control › Thermostatic Control

ENGINEERING ADVANTAGE

These compact differential pressure controllers for heating and cooling systems are particularly effective in situations requiring high temperatures and/or pressure drop. They can be used both on the primary and secondary side in district heating and comfort cooling systems. Rust protection is assured thanks to the electrophoretically painted ductile iron body.

› Inline design
Inline flow allows high pressure drops without noise.

› Adjustable set-point
Delivers desired differential pressure ensuring accurate balancing.

› Measuring point
Simplifies the balancing procedure, increases its accuracy and enables troubleshooting.

› Technical description

Application:
Heating and cooling systems with variable flow.

Functions:
Differential pressure control over the load.

Dimensions:
DN 15-150

Pressure class:
PN 25
DN 100-150: PN 16 and PN 25

Max. differential pressure (ΔpV):
1600 kPa = 16 bar

Setting range:
Δp over the load is adjustable within:
DN 15-125: 5-30 kPa, 10-60 kPa, 10-100 kPa or 60-150 kPa.
DN 150: 5-30 kPa, 10-60 kPa, 10-100 kPa, 60-150 kPa or 100-400 kPa.
Delivery setting:
DN 15-50: Maximum value (30, 60, 100 resp. 150 kPa).
DN 65-125: Midway min./max. value (~18, ~35, ~55, resp. ~105 kPa).
DN 150: Minimum value (5, 10, 10, 60 resp. 100 kPa).

Temperature:
Max. working temperature:
120°C for DN 15-150 with measuring points
120°C for DN 15-125 without measuring points
150°C for DN 150 without measuring points
Min. working temperature: -10°C

Media:
Water and neutral fluids, water-glycol mixtures.

Material:
Valve body: Ductile iron EN-GJS-400
Diaphragms and gaskets: EPDM
Adjustment ring: DN 15-50 Ryton PPS, DN 65-125 R St 37-2 steel. (DN 150 has no adjustment ring)

Surface treatment:
Electrophoretic painting.

Marking:
TA, DN, PN, Material, Kvs, Δp and flow direction arrow.

Flanges:
DN 15-50: According to EN-1092-2:1997, type 16.
DN 65-150: According to EN-1092-2:1997, type 21.

Operating function

DA 516 (DN 15-125)
The pressure upstream of the load acts through an external capillary pipe (Δp+) on the plus side of the diaphragm (1) and attempts to close the valve.
The pressure downstream of the load acts via an internal capillary pipe in the valve body and attempts, together with the spring (3) force, to open the valve. In this way, the differential pressure over the load is kept constant on the set value.
The spring force can be adjusted by turning the adjustment ring (5). Adjustment can be fixed by tightening the fixing screw (4).

DN 150
Valve DN 150 is a pilot controlled valve. It consists of a diaphragm and spring actuated inline main valve (3), an adjustable built-in two way differential pressure controlling pilot valve (7) and a built-in throttle (4). Various chambers in the main valve and pilot valve are interconnected with internal channels.
The main spring (2) opens the main valve, while differential pressure on the main diaphragm (1) closes it. The pilot spring (8) closes the pilot valve, while differential pressure on the pilot piston (9) opens it. The pilot valve reacts to sensed changes in controlled differential pressure (Δp). By turning the adjustment screw (6), force of the pilot spring is changed and the preset value of Δp is adjusted.
If Δp is equal to the preset value, both pilot and main valve are in equilibrium and stationary.
If Δp is higher than preset value, the pilot valve opens and increases the flow in bypass line (5). Increased bypass flow results in increased pressure drop on the throttle (4). This increased pressure drop on the throttle is led via internal channels onto the main diaphragm (1) and causes the main valve (3) to close. Flow in the main line decreases, and brings Δp back down to the preset value.
If Δp decreases, the pilot valve closes and decreases the flow in bypass line (5). Pressure drop on the throttle (4) decreases, so differential pressure on the main diaphragm (1) decreases and main valve (3) opens to bring Δp back up to the preset value.

DN 15-50

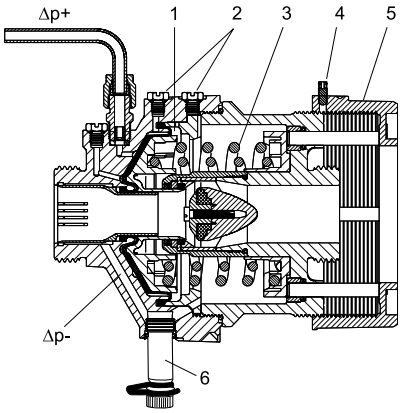

DN 65-125

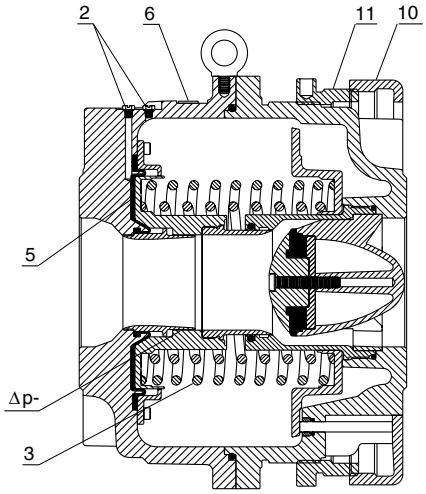

DN 150

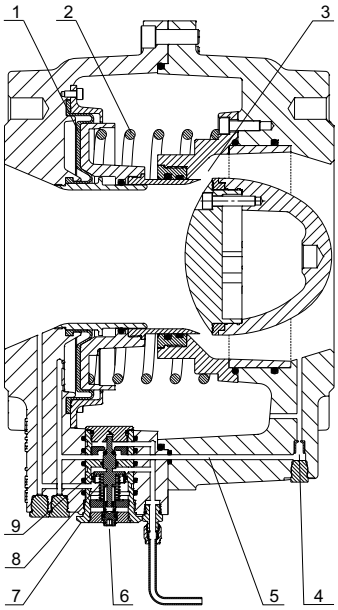

DAF 516
Installation in the inlet pipe. Function is the same as for DA 516, except that the pressure downstream the load acts through the another external copper impulse pipe (Δp-) to the minus side of the diaphragm.

Sizing

1. Select the smallest size for the designed flow according to the diagram.
2. Check that the available Δp is bigger than the pressure drop of the valve at the designed flow. The pressure drop can be found in the diagram or calculated by the formula:

$$\Delta p = \left(\frac{q}{100 \times Kvs} \right)^2 \qquad [kPa, l/h]$$

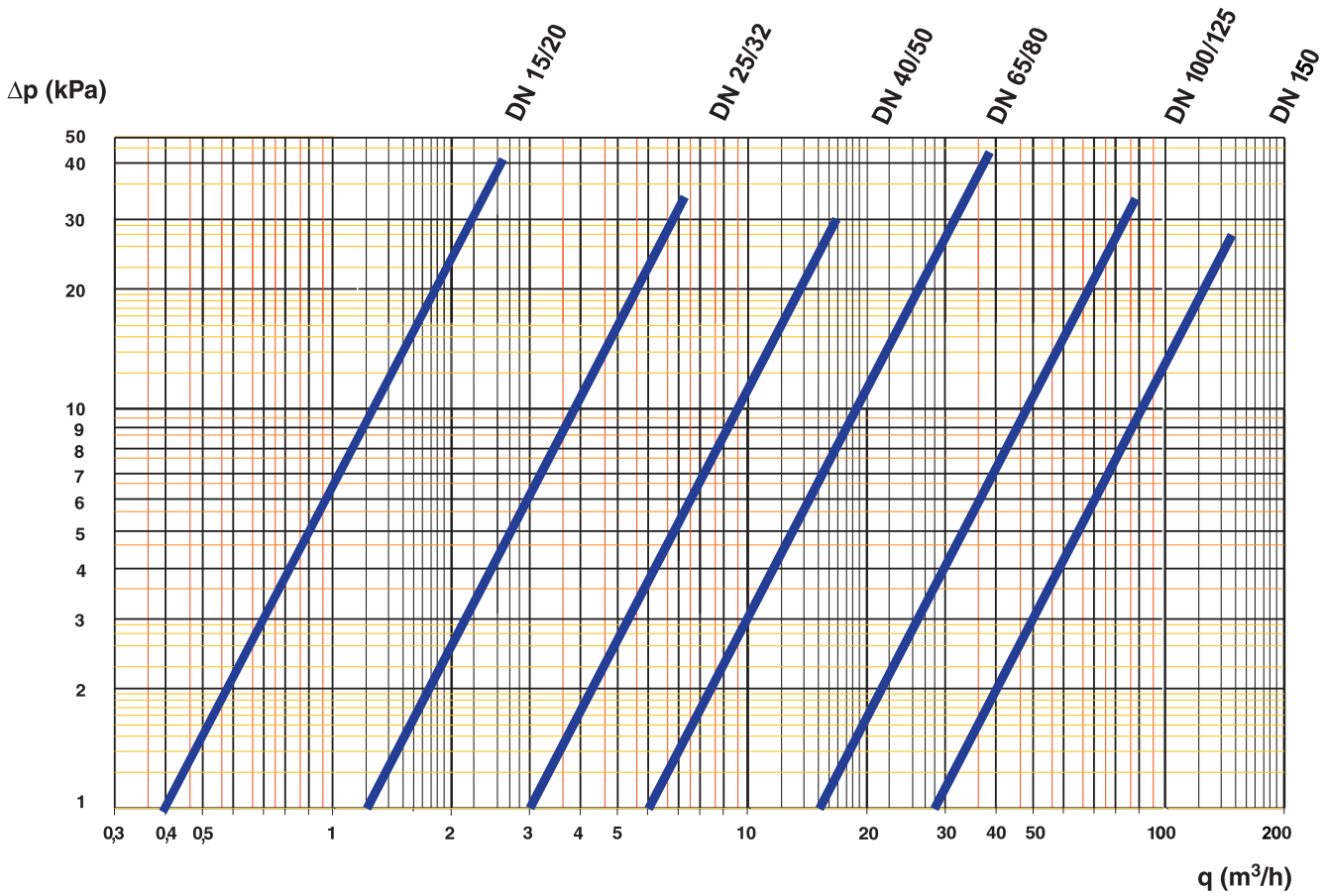

Installation

IMPORTANT: The valve body must not be disassembled.
By incorrent handling, the controller may not work properly and safety problems may occur.

The **DA 516** must be installed in the return pipe. The **DAF 516** can also be installed in the flow pipe. Flow direction is shown by the arrow (11) on the valve's identification plate
(10). The best position is horizontal with the venting screws (2) pointing upwards. Installation of a strainer upstream of the valve is recommended.
Connect capillary pipe (Δp+, copper Ø6x1), to the pipeline upstream of the load. In case of DAF 516, connect another capillary pipe downstream the load.
In case of a horizontal pipeline connect the capillary pipe laterally to prevent air and dirt from entering. When filling, vent the body by using the venting screws (2).
When welding the connections, the valve must be protected from too high a temperature.
In case of valves DN 15-50, turn the adjustment ring (5) clock-wise until stop to make the nut (7) on the outlet side accessible.

If measuring point is mounted on the DA 516, the differential pressure over the load can be measured by using TA's measuring or balancing instruments.

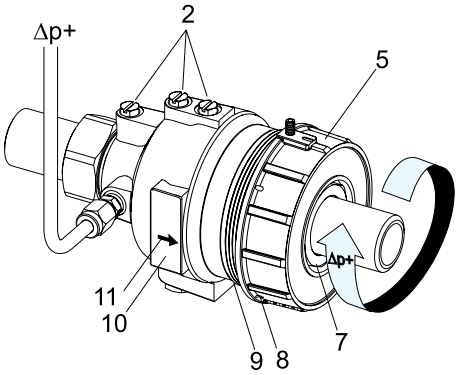

Normal pipe fittings
Try to avoid mounting taps and pumps immediately before the valve.

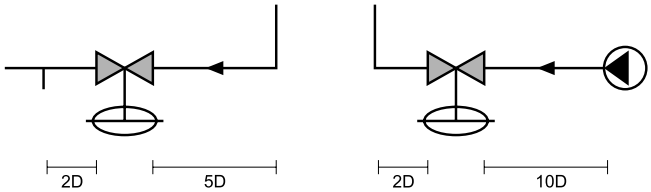

Capillary pipe
Before putting into operation, the capillary pipe must be installed. The other end of the capillary pipe is connected to the balancing valve STAD/STAF or other suitable point on the pipeline.

Setting

DN 15-125
The differential pressure can be adjusted by turning the adjustment ring (5). The preset value can be sealed through the holes (see (8) and (9) under Installation).

DN 150
The differential pressure can be adjusted by turning the adjustment screw in the pilot valve, using 4 mm Allen key. Turn the adjustment screw clockwise to increase Δp and vice versa.

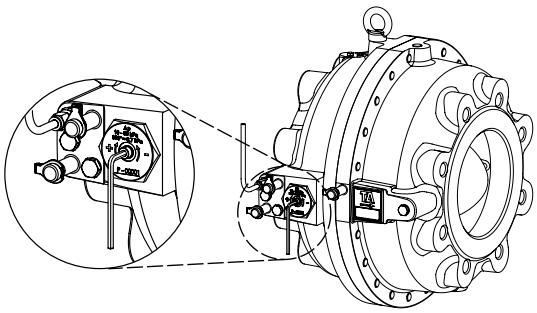

Application example

Keeping the differential pressure over a control valve constant

Shunt group
DA 516 should be mounted downstream of the control valve and STAD (STAF) may preferrably be mounted in the supply pipe.

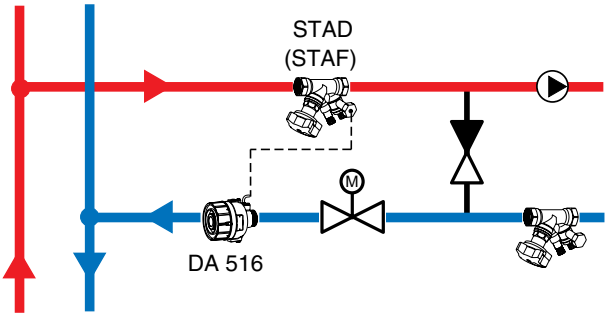

Heat exchanger
DA 516 should be mounted downstream of the control valve and STAD (STAF) upstream of the control valve, but downstream of the heat exchanger.
STAD (STAF) can be mounted in the supply pipe, but with a decreased valve authority as a consequence.

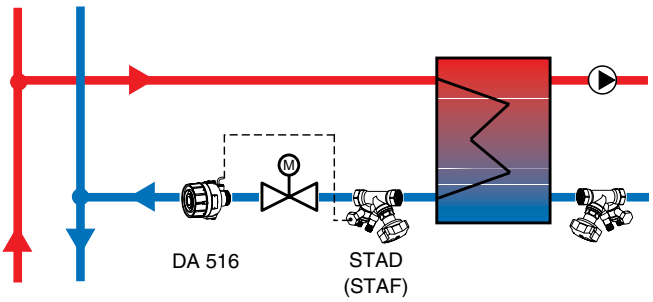

Articles – DA 516

DA 516 – DN 15-50

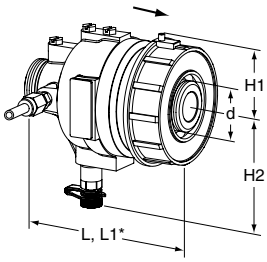

With measuring point

Capillary pipe (Ø6) included: 1 200 mm

PN 25

Article No	EAN	DN	d	L	L1*	H1	H2	Kvs	Kg
5-30 kPa									
52 795-020		15/20	G1	106	116	41	79	4	1,5
52 795-025		25/32	G1 1/4	125	150	51	84	12	2,6
52 795-040		40/50	G2	162	190	70	102	30	5,8
10-60 kPa									
52 795-120		15/20	G1	106	116	41	79	4	1,5
52 795-125		25/32	G1 1/4	125	150	51	84	12	2,6
52 795-140		40/50	G2	162	190	70	102	30	5,8
10-100 kPa									
52 795-220	7318793964403	15/20	G1	106	116	41	79	4	1,5
52 795-225	7318793964502	25/32	G1 1/4	125	150	51	84	12	2,6
52 795-240	7318793964601	40/50	G2	162	190	70	102	30	5,8
60-150 kPa									
52 795-320	7318793965103	15/20	G1	106	116	41	79	4	1,5
52 795-325	7318793965202	25/32	G1 1/4	125	150	51	84	12	2,6
52 795-340	7318793965301	40/50	G2	162	190	70	102	30	5,8

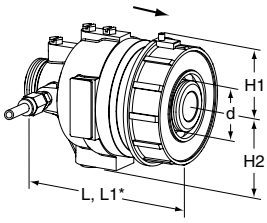

Without measuring point

Capillary pipe (Ø6) included: 1 200 mm

PN 25

Article No	EAN	DN	d	L	L1*	H1	H2	Kvs	Kg
5-30 kPa									
52 763-020	7318793853400	15/20	G1	106	116	41	52	4	1,5
52 763-025	7318793853509	25/32	G1 1/4	125	150	51	57	12	2,6
52 763-040	7318793853608	40/50	G2	162	190	70	75	30	5,8
10-60 kPa									
52 761-020	7318793854100	15/20	G1	106	116	41	52	4	1,5
52 761-025	7318793854209	25/32	G1 1/4	125	150	51	57	12	2,6
52 761-040	7318793854308	40/50	G2	162	190	70	75	30	5,8
10-100 kPa									
52 760-020	7318793586209	15/20	G1	106	116	41	52	4	1,5
52 760-025	7318793586308	25/32	G1 1/4	125	150	51	57	12	2,6
52 760-040	7318793564306	40/50	G2	162	190	70	75	30	5,8
60-150 kPa									
52 762-020	7318793855206	15/20	G1	106	116	41	52	4	1,5
52 762-025	7318793855305	25/32	G1 1/4	125	150	51	57	12	2,6
52 762-040	7318793855404	40/50	G2	162	190	70	75	30	5,8

*) Length incl adjustment ring.

→ = Flow direction

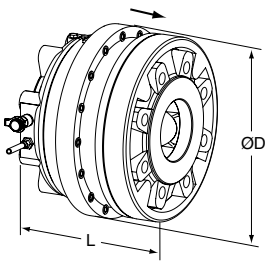

DA 516 – DN 65-125

DN 65-125 are flanged and do not need any separate connections.

With measuring point

Capillary pipe (Ø6) included: 1 500 mm

PN 25 (DN 65-80 also fit PN 16 flanges)

Article No	DN	D	L	Kvs	Kg
5-30 kPa					
52 795-065	65	210	160	60	18
52 795-080	80	210	160	60	18
52 795-090	100	320	254	150	58
52 795-091	125	320	254	150	58
10-60 kPa					
52 795-165	65	210	160	60	18
52 795-180	80	210	160	60	18
52 795-190	100	320	254	150	58
52 795-191	125	320	254	150	58
10-100 kPa					
52 795-265	65	210	160	60	18
52 795-280	80	210	160	60	18
52 795-290	100	320	254	150	58
52 795-291	125	320	254	150	58
60-150 kPa					
52 795-365	65	210	160	60	18
52 795-380	80	210	160	60	18
52 795-390	100	320	254	150	58
52 795-391	125	320	254	150	58

PN 16

Article No	DN	D	L	Kvs	Kg
5-30 kPa					
52 795-490	100	320	254	150	58
52 795-491	125	320	254	150	58
10-60 kPa					
52 795-590	100	320	254	150	58
52 795-591	125	320	254	150	58
10-100 kPa					
52 795-690	100	320	254	150	58
52 795-691	125	320	254	150	58
60-150 kPa					
52 795-790	100	320	254	150	58
52 795-791	125	320	254	150	58

→ = Flow direction

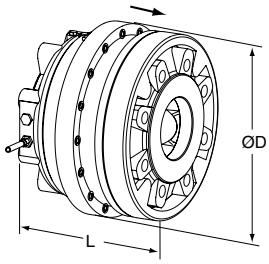

Without measuring point

Capillary pipe (Ø6) included: 1 500 mm

PN 25 (DN 65-80 also fit PN 16 flanges)

Article No	EAN	DN	D	L	Kvs	Kg
5-30 kPa						
52 763-065	7318793853707	65	210	160	60	18
52 763-080	7318793853806	80	210	160	60	18
52 763-090	7318793853905	100	320	254	150	58
52 763-091	7318793854001	125	320	254	150	58
10-60 kPa						
52 761-065	7318793854407	65	210	160	60	18
52 761-080	7318793854506	80	210	160	60	18
52 761-090	7318793854605	100	320	254	150	58
52 761-091	7318793854704	125	320	254	150	58
10-100 kPa						
52 760-065	7318793854803	65	210	160	60	18
52 760-080	7318793854902	80	210	160	60	18
52 760-090	7318793855008	100	320	254	150	58
52 760-091	7318793855107	125	320	254	150	58
60-150 kPa						
52 762-065	7318793855503	65	210	160	60	18
52 762-080	7318793862303	80	210	160	60	18
52 762-090	7318793855602	100	320	254	150	58
52 762-091	7318793855701	125	320	254	150	58

PN 16

Article No	EAN	DN	D	L	Kvs	Kg
5-30 kPa						
52 763-490		100	320	254	150	58
52 763-491		125	320	254	150	58
10-60 kPa						
52 761-490		100	320	254	150	58
52 761-491		125	320	254	150	58
10-100 kPa						
52 760-490		100	320	254	150	58
52 760-491		125	320	254	150	58
60-150 kPa						
52 762-490		100	320	254	150	58
52 762-491		125	320	254	150	58

→ = Flow direction

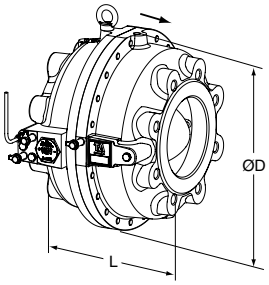

DA 516 – DN 150
DN 150 is flanged and do not need any separate connections.

With measuring points
Capillary pipe (Ø6) included: 1 500 mm

PN 25

Article No	EAN	DN	D	L	Kvs	Kg
5-30 kPa						
52 771-592		150	382	267	280	85
10-60 kPa						
52 771-692		150	382	267	280	85
10-100 kPa						
52 771-792		150	382	267	280	85
60-150 kPa						
52 771-892		150	382	267	280	85
100-400 kPa						
52 771-992		150	382	267	280	85

PN 16

Article No	EAN	DN	D	L	Kvs	Kg
5-30 kPa						
52 770-592		150	382	267	280	85
10-60 kPa						
52 770-692		150	382	267	280	85
10-100 kPa						
52 770-792		150	382	267	280	85
60-150 kPa						
52 770-892		150	382	267	280	85
100-400 kPa						
52 770-992		150	382	267	280	85

→ = Flow direction

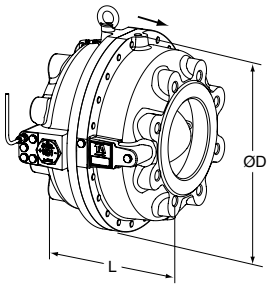

Without measuring points

Capillary pipe (Ø6) included: 1 500 mm

PN 25

Article No	EAN	DN	D	L	Kvs	Kg
5-30 kPa						
52 774-592		150	382	267	280	85
10-60 kPa						
52 774-692		150	382	267	280	85
10-100 kPa						
52 774-792		150	382	267	280	85
60-150 kPa						
52 774-892		150	382	267	280	85
100-400 kPa						
52 774-992		150	382	267	280	85

PN 16

Article No	EAN	DN	D	L	Kvs	Kg
5-30 kPa						
52 772-592		150	382	267	280	85
10-60 kPa						
52 772-692		150	382	267	280	85
10-100 kPa						
52 772-792		150	382	267	280	85
60-150 kPa						
52 772-892		150	382	267	280	85
100-400 kPa						
52 772-992		150	382	267	280	85

→ = Flow direction

Articles – DAF 516

For installation in the inlet pipe.

DAF 516 – DN 15-50

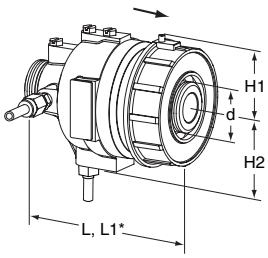

Without measuring point
Capillary pipes (Ø6) included: 2 x 1 200 mm
PN 25

Article No	DN	d	L	L1*	H1	H2	Kvs	Kg
5-30 kPa								
52 763-120	15/20	G1	106	116	41	52	4	1,5
52 763-125	25/32	G1 1/4	125	150	51	57	12	2,6
52 763-140	40/50	G2	162	190	70	75	30	5,8
10-60 kPa								
52 761-120	15/20	G1	106	116	41	52	4	1,5
52 761-125	25/32	G1 1/4	125	150	51	57	12	2,6
52 761-140	40/50	G2	162	190	70	75	30	5,8
10-100 kPa								
52 760-120	15/20	G1	106	116	41	52	4	1,5
52 760-125	25/32	G1 1/4	125	150	51	57	12	2,6
52 760-140	40/50	G2	162	190	70	75	30	5,8
60-150 kPa								
52 762-120	15/20	G1	106	116	41	52	4	1,5
52 762-125	25/32	G1 1/4	125	150	51	57	12	2,6
52 762-140	40/50	G2	162	190	70	75	30	5,8

*) Length incl adjustment ring.

→ = Flow direction

DAF 516 – DN 65-125

DN 65-125 are flanged and do not need any separate connections.

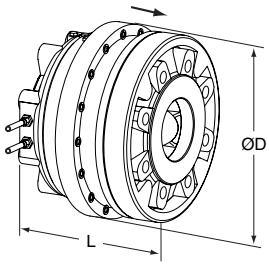

Without measuring point

Capillary pipes (Ø6) included: 2 x 1 500 mm

PN 25 (DN 65-80 also fit PN 16 flanges)

Article No	DN	D	L	Kvs	Kg
5-30 kPa					
52 763-165	65	210	160	60	18
52 763-180	80	210	160	60	18
52 763-190	100	320	254	150	58
52 763-191	125	320	254	150	58
10-60 kPa					
52 761-165	65	210	160	60	18
52 761-180	80	210	160	60	18
52 761-190	100	320	254	150	58
52 761-191	125	320	254	150	58
10-100 kPa					
52 760-165	65	210	160	60	18
52 760-180	80	210	160	60	18
52 760-190	100	320	254	150	58
52 760-191	125	320	254	150	58
60-150 kPa					
52 762-165	65	210	160	60	18
52 762-180	80	210	160	60	18
52 762-190	100	320	254	150	58
52 762-191	125	320	254	150	58

PN 16

Article No	DN	D	L	Kvs	Kg
5-30 kPa					
52 763-590	100	320	254	150	58
52 763-591	125	320	254	150	58
10-60 kPa					
52 761-590	100	320	254	150	58
52 761-591	125	320	254	150	58
10-100 kPa					
52 760-590	100	320	254	150	58
52 760-591	125	320	254	150	58
60-150 kPa					
52 762-590	100	320	254	150	58
52 762-591	125	320	254	150	58

→ = Flow direction

Connections for DN 15-50

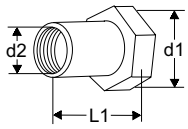

With female thread
Threads according to ISO 228

Article No	EAN	d1	d2	L1*
52 759-015	7318793546609	G1	G1/2	26
52 759-020	7318793546708	G1	G3/4	32
52 759-025	7318793546807	G1 1/4	G1	47
52 759-032	7318793546906	G1 1/4	G1 1/4	52
52 759-040	7318793547002	G2	G1 1/2	52
52 759-050	7318793547101	G2	G2	64,5

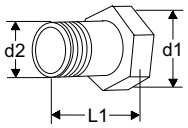

With male thread
Threads according to ISO 7

Article No	EAN	d1	d2	L1*
52 759-115		G1	R1/2	34
52 759-120		G1	R3/4	40
52 759-125		G1 1/4	R1	40
52 759-132		G1 1/4	R1 1/4	45
52 759-140		G2	R1 1/2	45
52 759-150		G2	R2	50

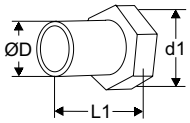

For welding

Article No	EAN	d1	D	L1*
52 759-315	7318793547200	G1	20,8	37
52 759-320	7318793547309	G1	26,3	42
52 759-325	7318793547408	G1 1/4	33,2	47
52 759-332	7318793547507	G1 1/4	40,9	47
52 759-340	7318793547606	G2	48,0	47
52 759-350	7318793547705	G2	60,0	52

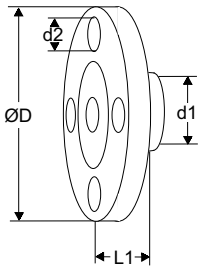

With flange
Attention! Can be used on the inlet side only.

Article No	EAN	d1	d2	D	L1*
52 759-515	7318793547804	G1	M12	95	10
52 759-520	7318793547903	G1	M12	105	20
52 759-525	7318793548009	G1 1/4	M12	115	5
52 759-532	7318793548108	G1 1/4	M16	140	15
52 759-540	7318793548207	G2	M16	150	5
52 759-550	7318793548306	G2	M16	165	20

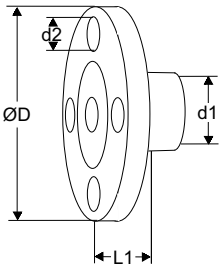

With flange
Attention! Must be used on the oulet side.

Article No	EAN	d1	d2	D	L1*
52 759-615	7318793855800	G1	M12	95	47
52 759-620	7318793855909	G1	M12	105	47
52 759-625	7318793856005	G1 1/4	M12	115	62
52 759-632	7318793856104	G1 1/4	M16	140	62
52 759-640	7318793856203	G2	M16	150	72
52 759-650	7318793856302	G2	M16	165	72

*) Fitting length (from the gasket surface to the end of the connection).).

Accessories

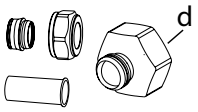

Connection set STAD
Must be used on STAD when connection of 6 mm capillary pipe.

Article No	EAN	d
52 762-006	7318793850003	G1/2
52 762-106	7318793850102	G3/4

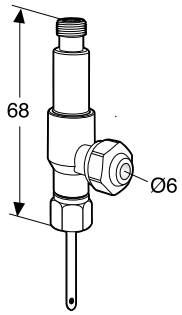

Measuring point, two-way
For connection of 6 mm copper pipe while permitting simultaneous use of TAs measuring or balancing instruments.

Article No	EAN
52 179-206	7318793848703

6-10-5 DA 516 06.2011

DA 516 DN65-125

IMI TA

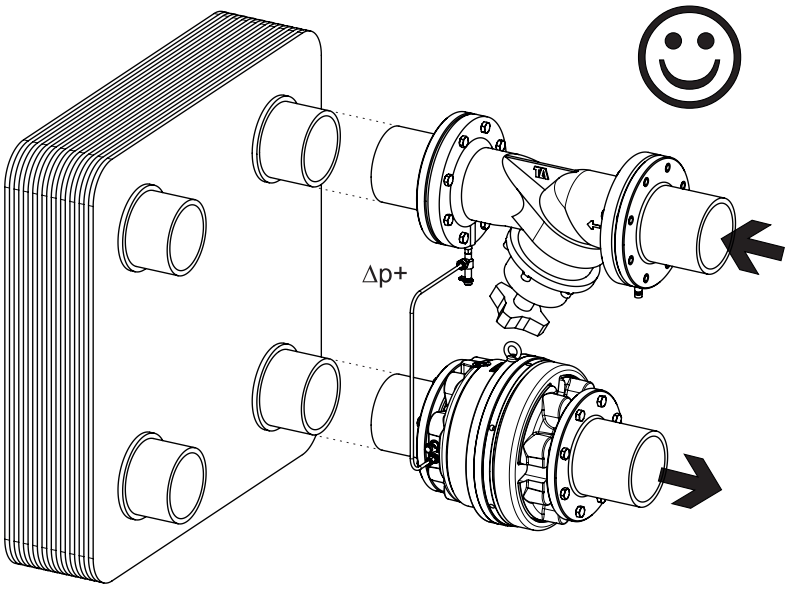

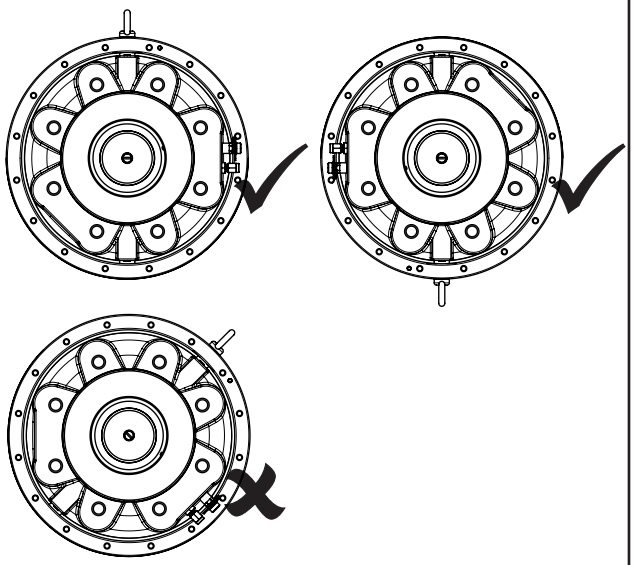

Number of turns	Δp [kPa] change per turn of setting nut			
	5 - 30	10 - 60	10 - 100	60 - 150
6,5	3,8	7,7	13,8	13,8

Measure flow & adjust Δp accordingly

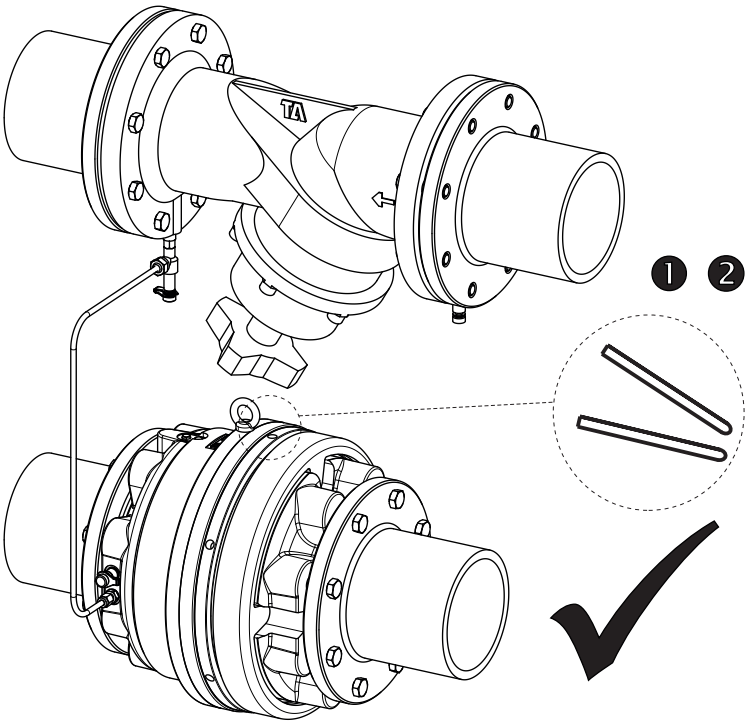

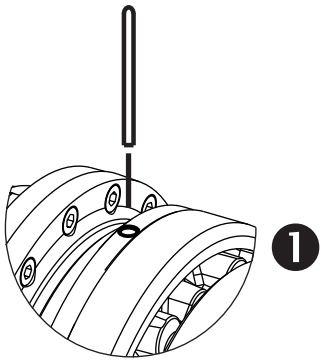

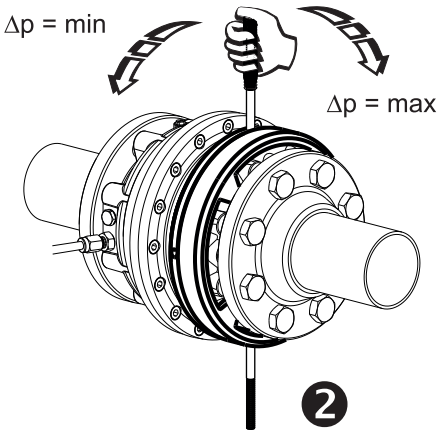

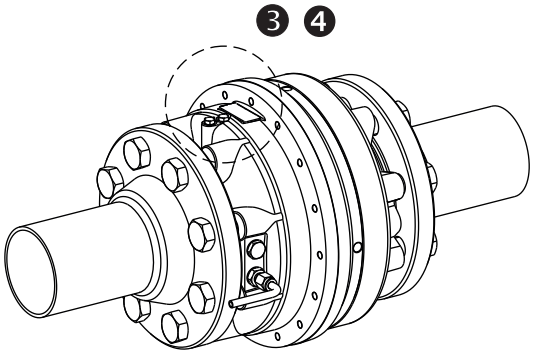

Max. 2 x 360°

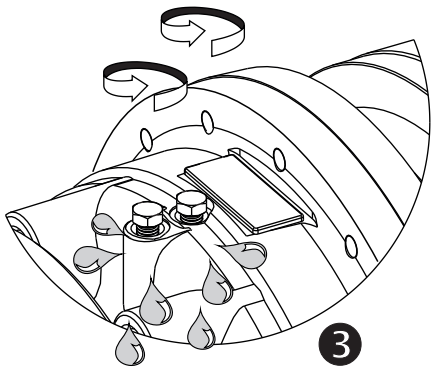

Mp = 0,5 Nm

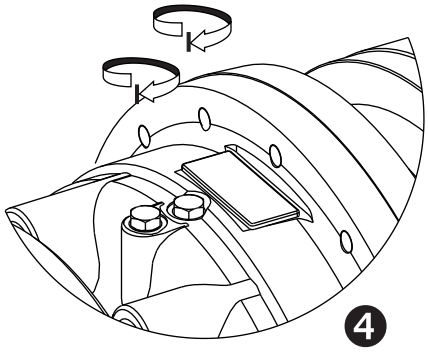

Approved by:

10652 - Installation instruction DA 516 DN65-125 by Alen Jerman 26.07.2011 - Rev. B

\\Server\3. Razvoj\DESIGN\URADNO\OBDELAVA\299

DA 516 - START-UP PROCEDURE

IMI TA

1

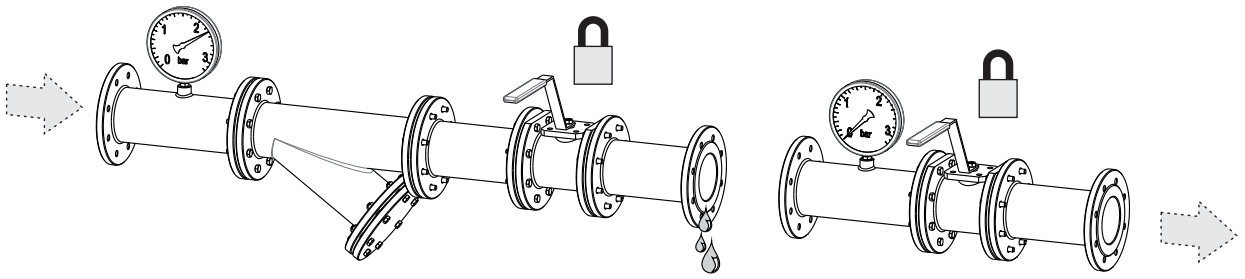

2

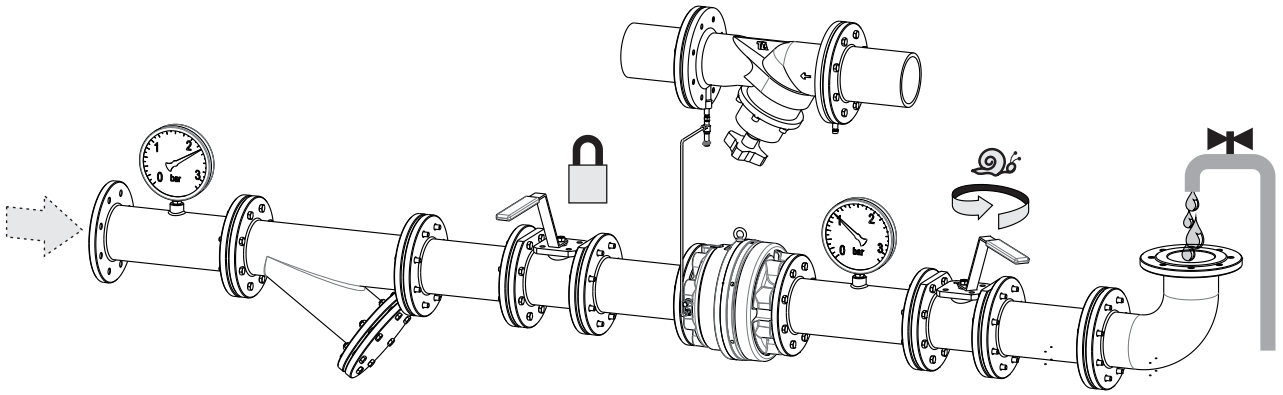

3

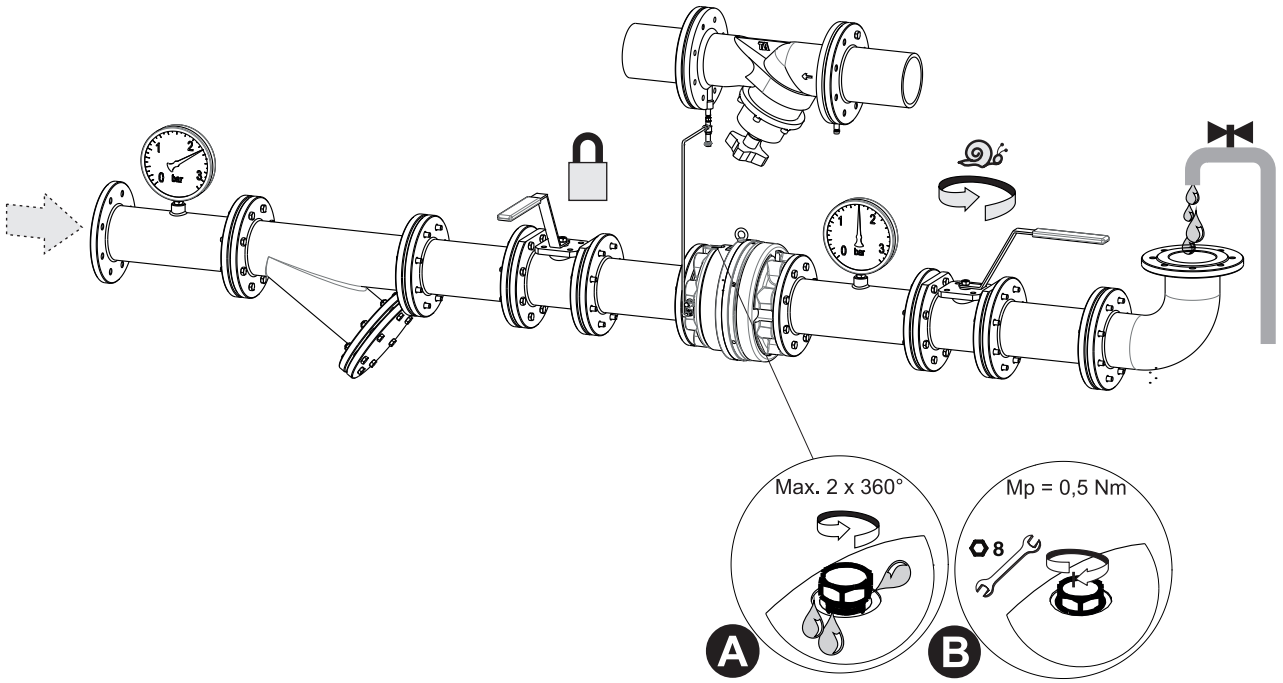

4

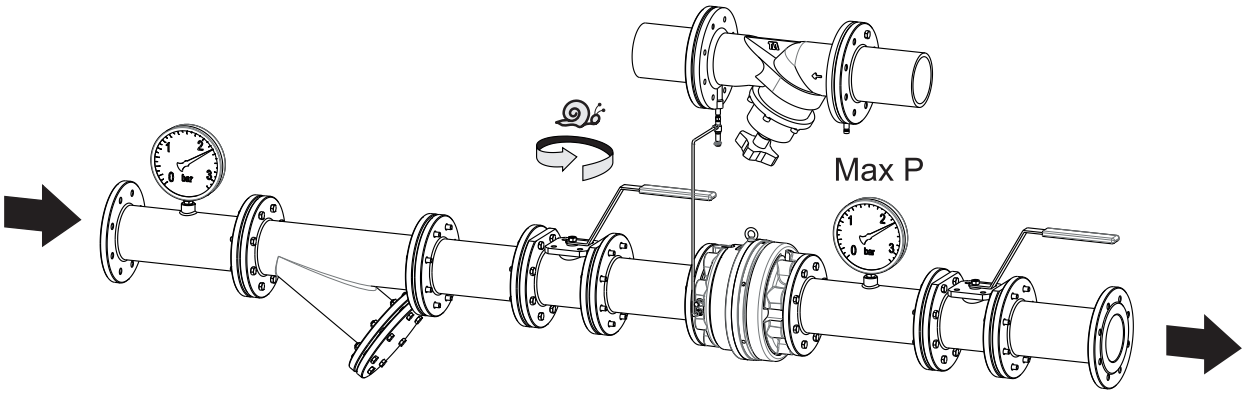

\\Server\3. Razvoj\DESIGN\URADNO\OBDELAVA\299

DA 516 DN65-125 (pipe)

IMI TA

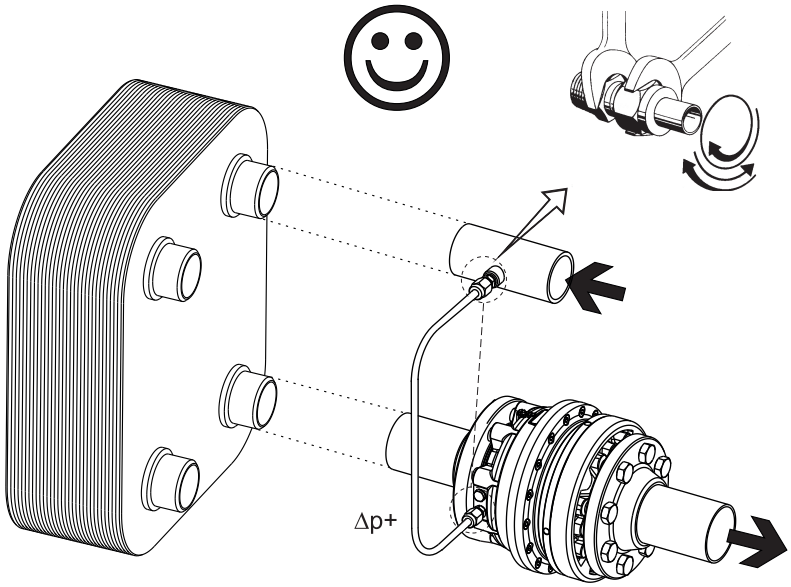

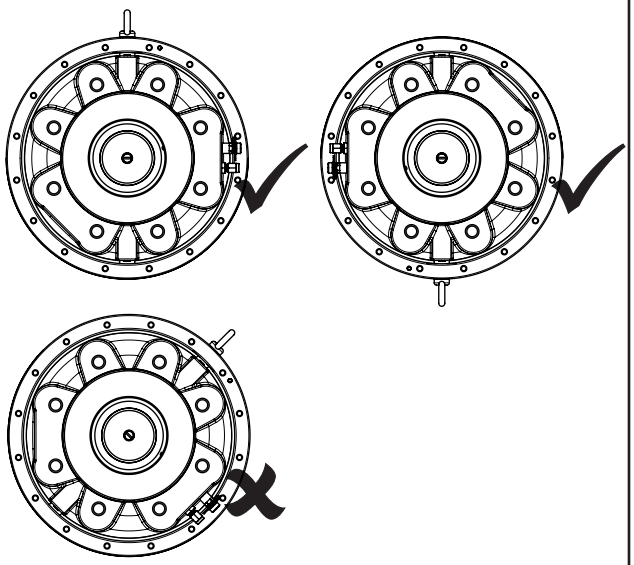

Number of turns	Δp [kPa] change per turn of setting nut			
	5 - 30	10 - 60	10 - 100	60 - 150
6,5	3,8	7,7	13,8	13,8

Measure flow & adjust Δp accordingly

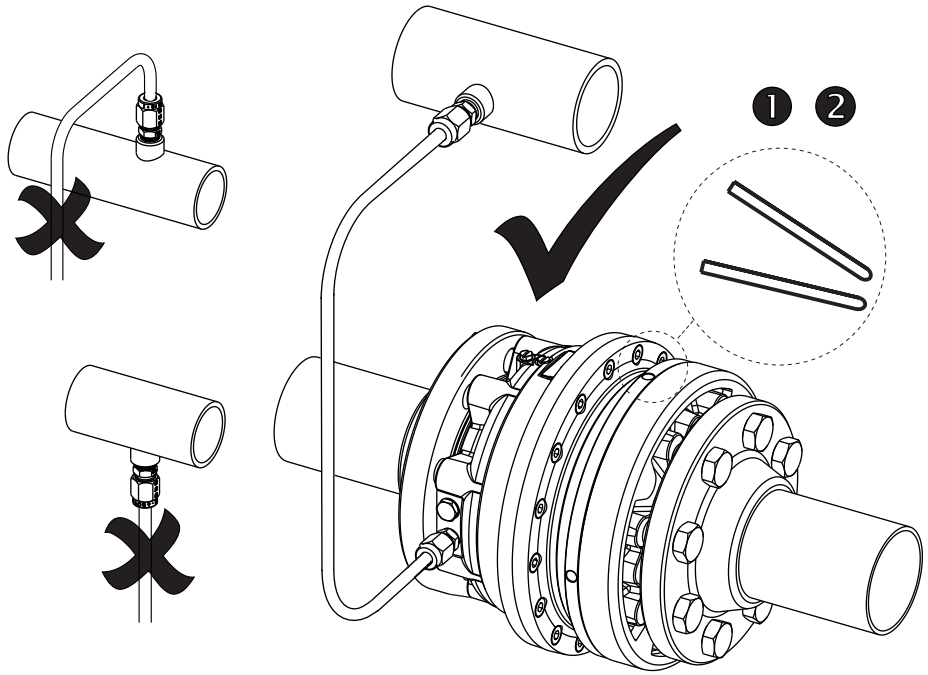

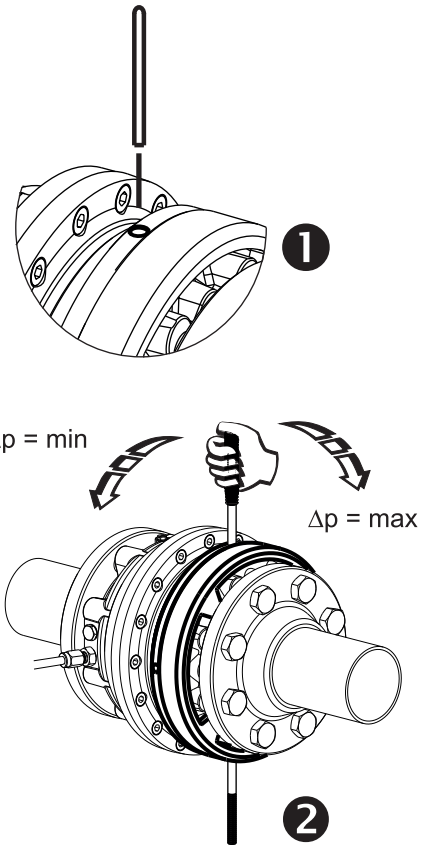

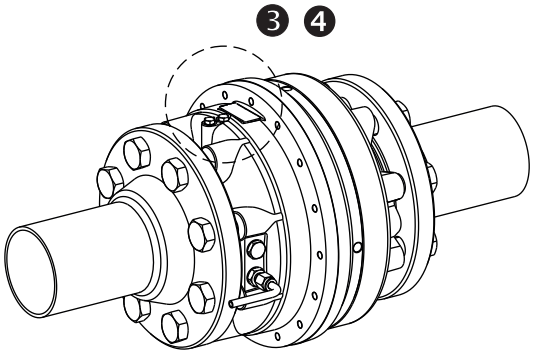

Max. 2 x 360°

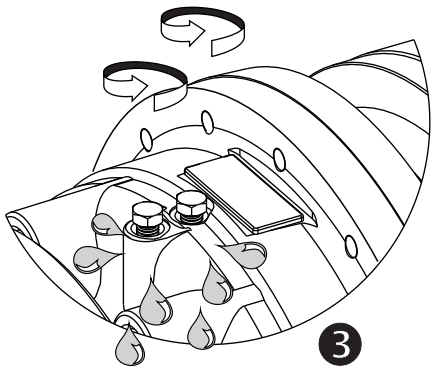

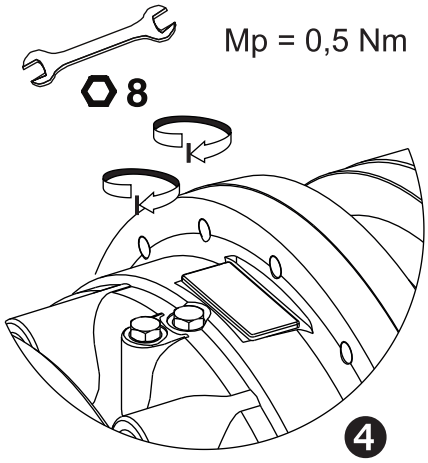

Mp = 0,5 Nm

Approved by:

13282 - Installation instruction DA 516 DN65-125 (pipe) by Alen Jerman 26.07.2011 - Rev. B

\\Server\3. Razvoj\DESIGN\URADNO\OBDELAVA\299

DA 516 - START-UP PROCEDURE

IMI TA

1

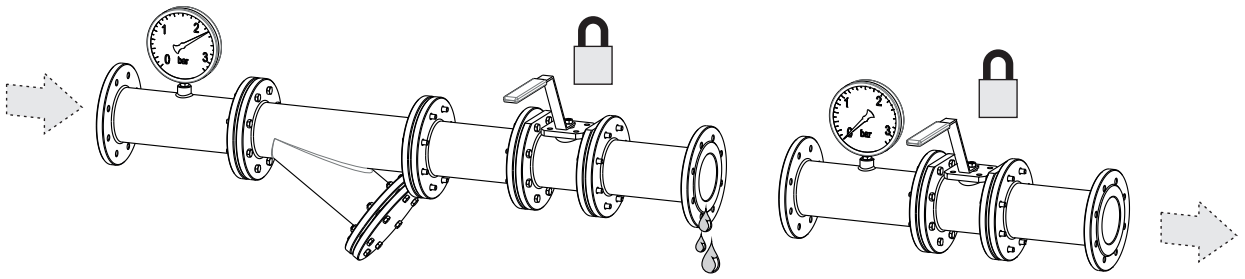

2

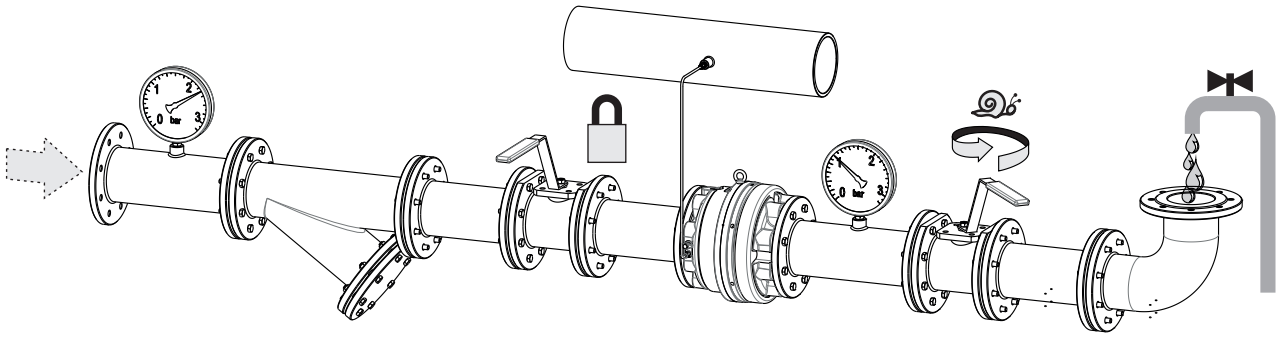

3

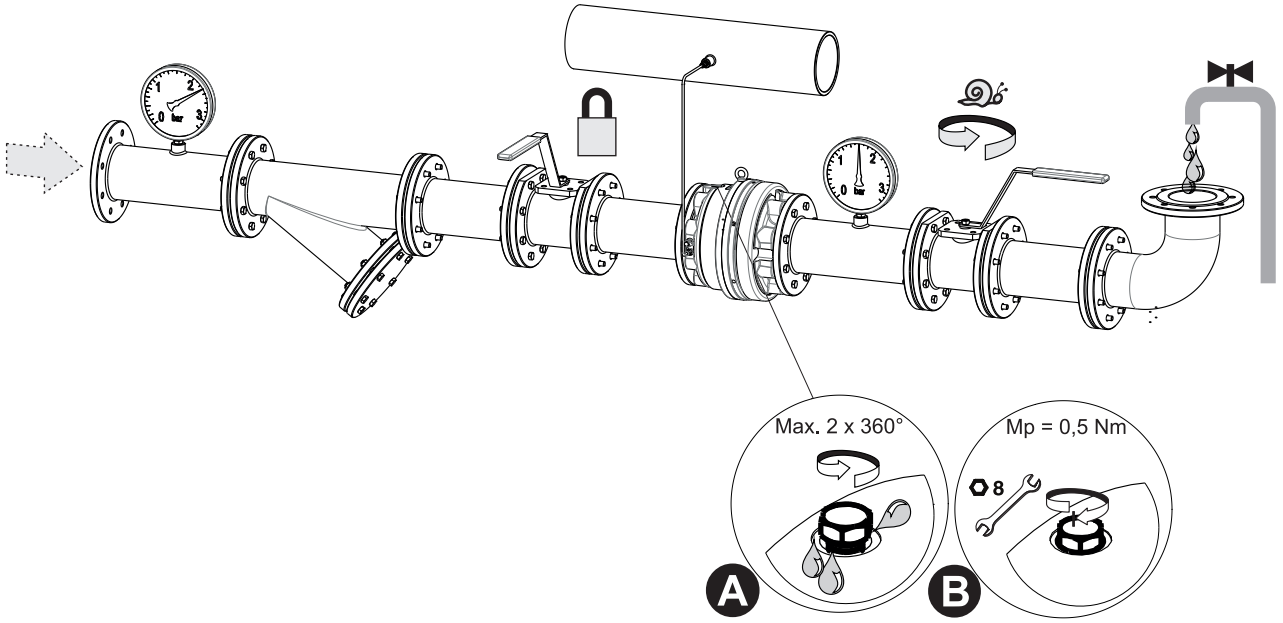

4

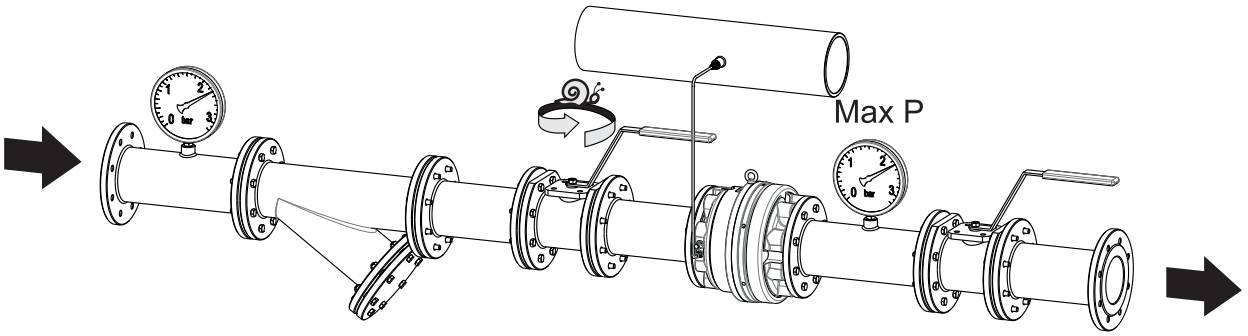

\\Server\3. Razvoj\DESIGN\URADNO\OBDELAVA\299

DA 516 DN65-125 (valve)

IMI TA

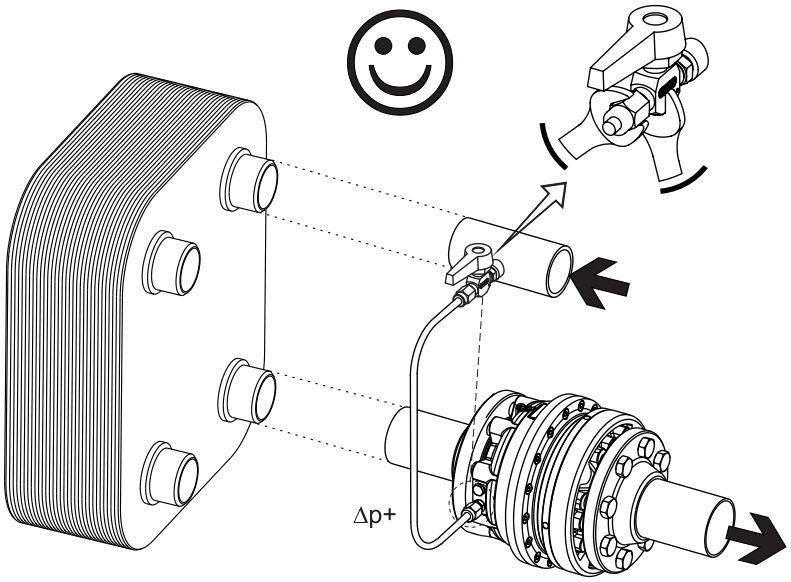

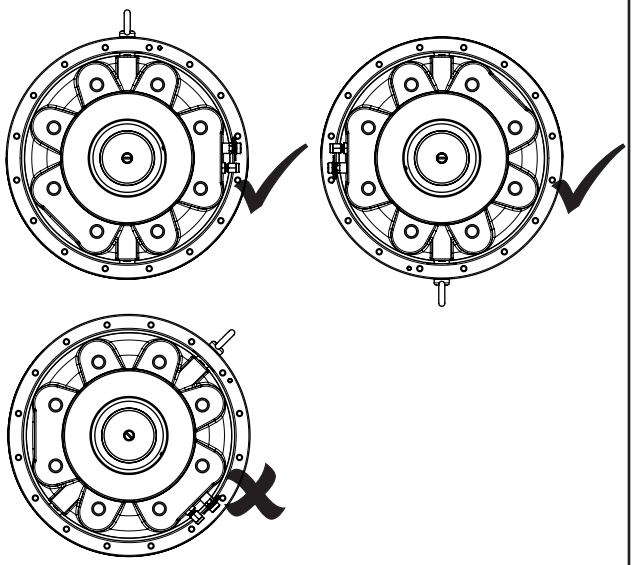

Number of turns	Δp [kPa] change per turn of setting nut			
	5 - 30	10 - 60	10 - 100	60 - 150
6,5	3,8	7,7	13,8	13,8

Measure flow & adjust Δp accordingly

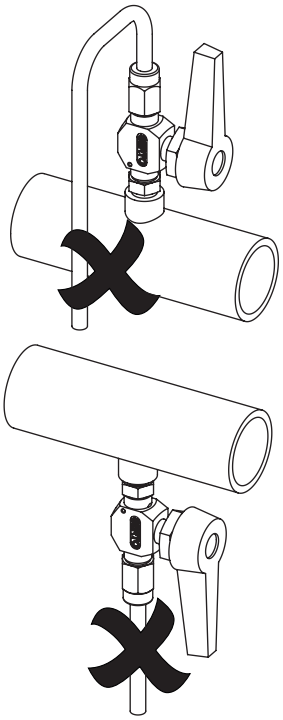

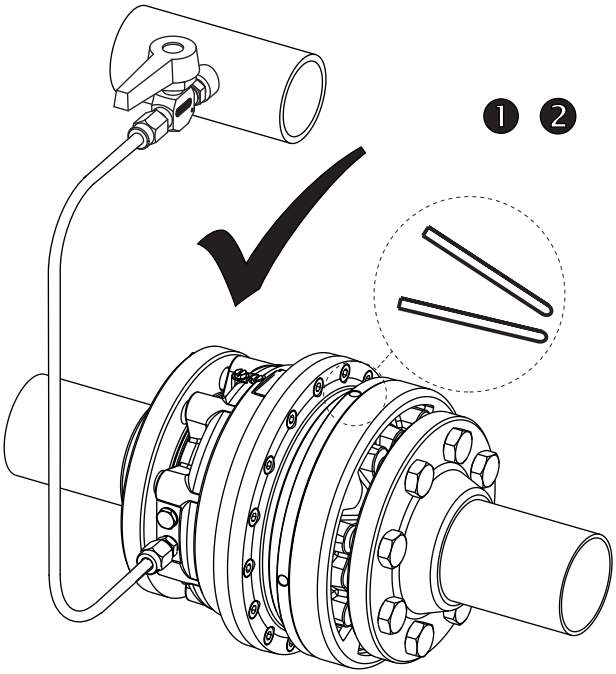

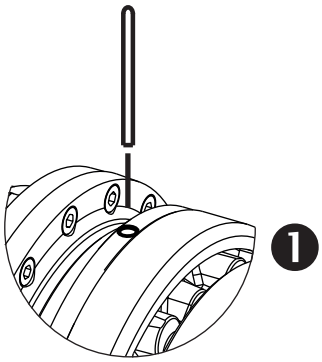

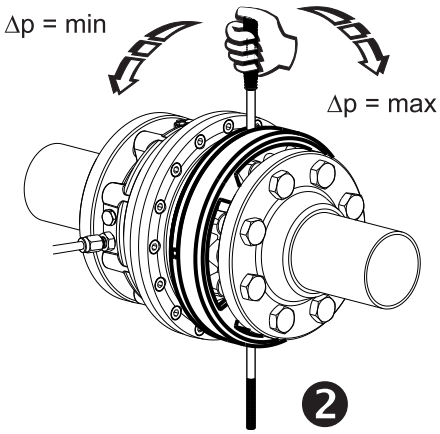

Max. 2 x 360°

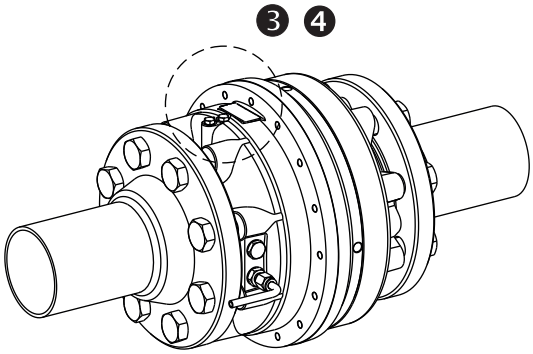

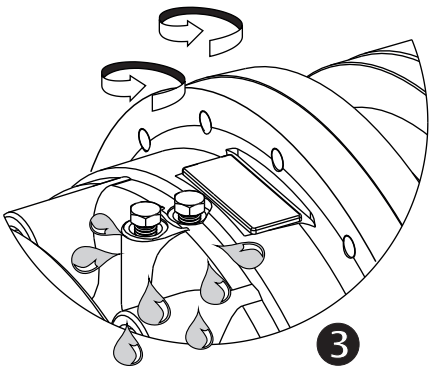

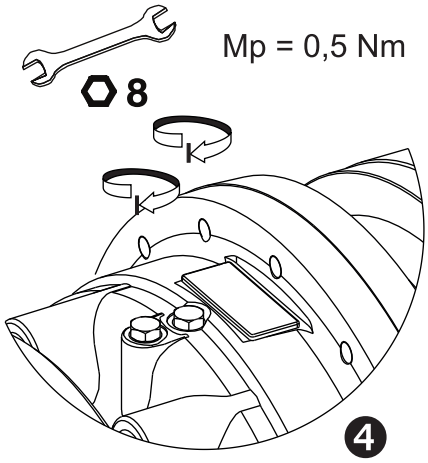

13281 - Installation instruction DA 516 DN65-125 (valve) by Alen Jerman 26.07.2011 - Rev. B Approved by:

DA 516 - START-UP PROCEDURE

IMI TA

1

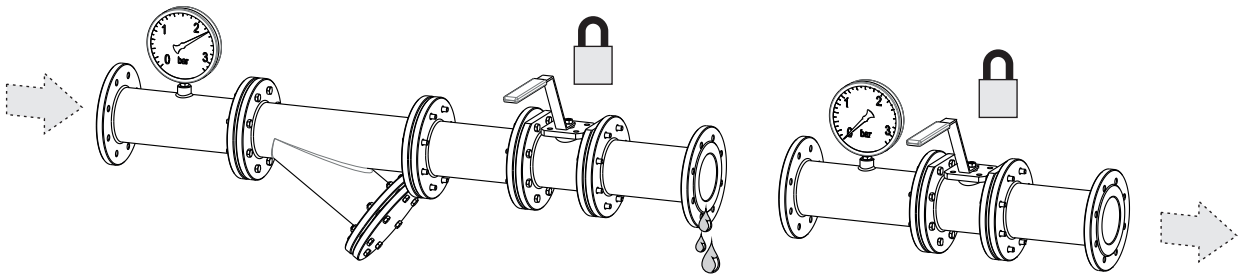

2

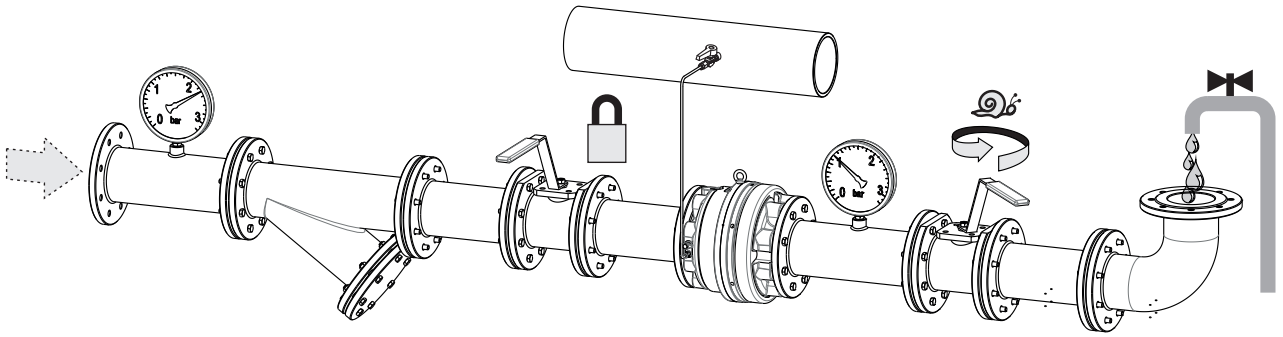

3

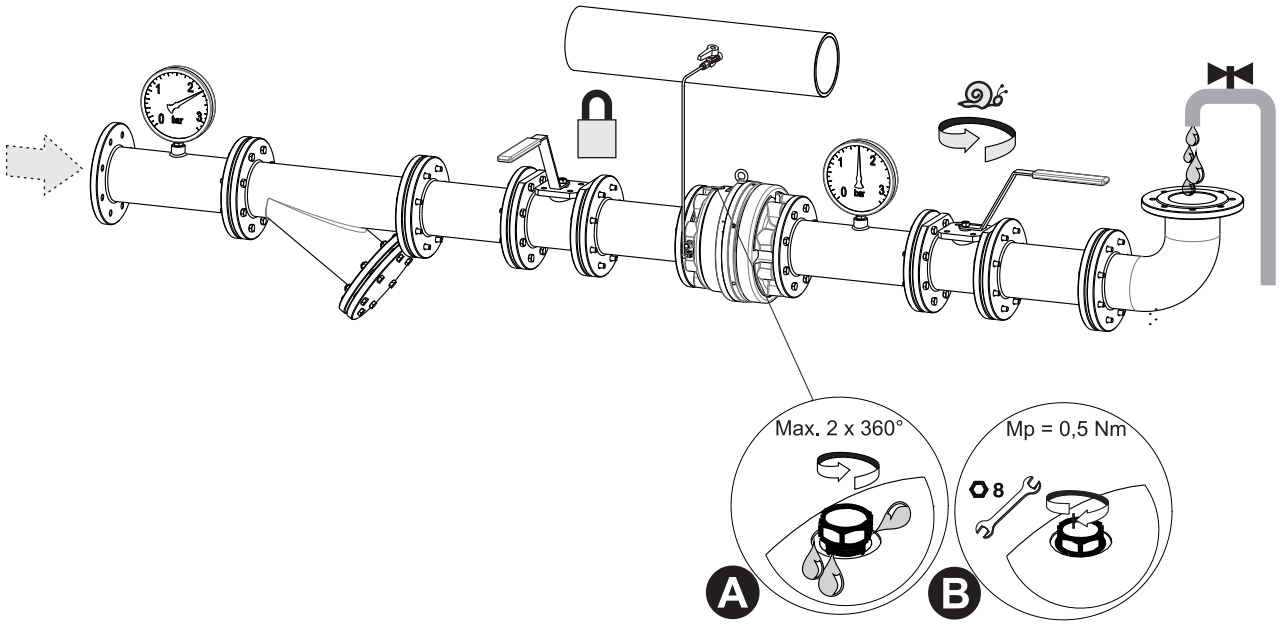

4

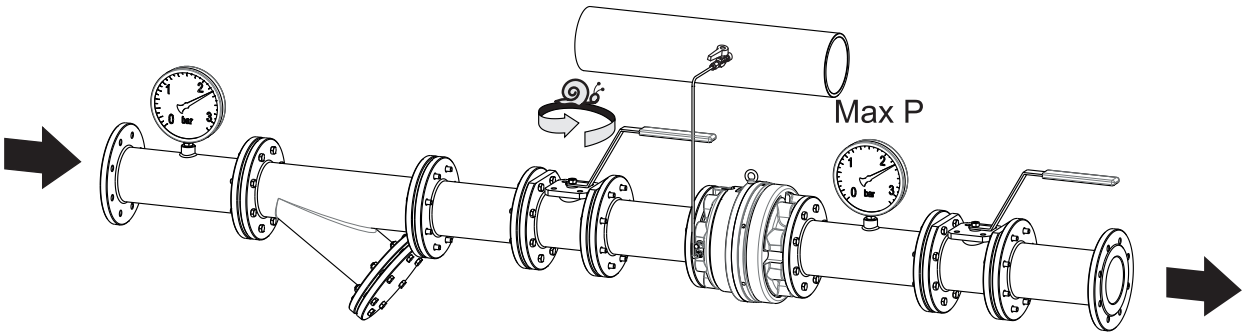

\\Server\3. Razvoj\DESIGN\URADNO\OBDELAVA\299