KTCM 512

Pressure independent balancing and control valve – For modulating control

TA

Pressurisation & Water Quality › Balancing & Control › Thermostatic Control

ENGINEERING ADVANTAGE

High-performing and compact, these pressure-independent temperature control valves for variable flow heating and cooling systems, are especially suitable for fan-coil applications. Also suitable for use on the secondary side in district heating and comfort cooling systems. Rust protection is assured due to the electrophoretically painted ductile iron body.

› Inline design
Inline flow allows high pressure drops without noise.

› Adjustable flow
Ensures the design flow.

› Self-sealing measuring points
For quick and easy measurement.

› Technical description

Application:
Heating and cooling systems with variable flow.

Functions:
Temperature control, differential pressure control over the built-in control valve and flow control.

Dimensions:
DN 15-20

Pressure class:
PN 25

Max. differential pressure (ΔpV):
800 kPa = 8 bar

Pressure drop across control part of the valve (Fc):
LF/NF: 20 kPa
HF: 40 kPa

Temperature:
Max. working temperature: 120°C
Min. working temperature: -10°C

Setting range:
Maximum flow is adjustable up to 800 l/h (NF), 210 l/h (LF) and 1 150 l/h (HF).
Delivery setting: Position 10 (fully open).

Media:
Water and neutral fluids, water-glycol mixtures.

Material:
Valve body: Ductile iron EN-GJS-400
Diaphragms and gaskets: EPDM

Surface treatment:
Electrophoretic painting.

Marking:
TA, DN, PN, Kvs, material and flow direction arrow.
Identification ring on measuring point:
White = Low flow (LF)
Black = Normal flow (NF)
Red = High flow (HF)

Max. lift of the control valve:
4 mm

Operating function

The control valve with integrated balancing (1) and the diaphragm operated differential pressure controller (2) are built in series in a common valve body.
Pressure upstream of the control and balancing part of the valve acts through an internal impulse pipe to the inlet side of the diaphragm (3).
Pressure downstream of the control and balancing part of the valve acts to the outlet side of the diaphragm together with a spring force (4).
The spring force corresponds to a 20 kPa (LF/NF) or 40 kPa (HF) pressure difference on the dipahragm. The pressure from the differential pressure controller relieves the control and balancing part of the valve, and at the same time limits the flow to the preset value.

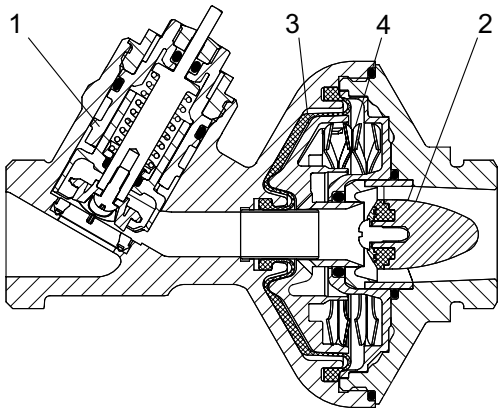

Sizing

The valve is capable of a maximum flow of 210 l/h (LF), 800 l/h (NF) or 1 150 l/h (HF).
Minimum pressure drop needed for the valves to operate are 25 kPa (LF/NF) and 45 kPa (HF).

Installation

Install in supply or return pipe. Flow direction is shown by the arrow on the valve body. Install the valve so that the control and balancing part of the valve and the measurement points are accessible. Check allowed positions of the actuator.
Installation of a strainer upstream of the valve is recommended.
Install the actuator after performing a leakage test.

Normal pipe fittings
Try to avoid mounting taps and pumps immediately before the valve.

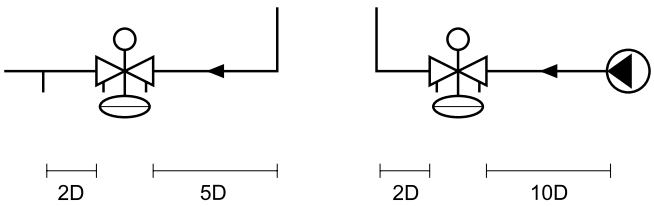

Application example

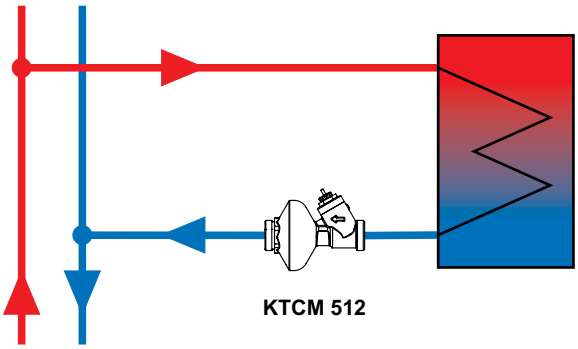

Setting

KTCM is delivered preset at position 10 (fully open). Presetting of a valve for a given flow, e.g. corresponding to position 8, is done as follows:

1. Place the presetting tool, Article No 52 133-100, at the valve.
2. Turn the presetting tool so that position 8 is pointing at the index* of the valve body.
3. Remove the presetting tool. The valve is now pre-set.

The charts under "Flow measuring" show flow at various positions of presetting.

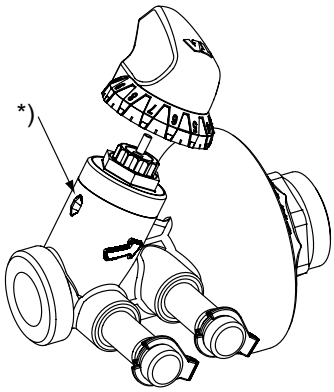

Flow measuring

To measure the flow through the valve, use TA's balancing or measuring instruments. The actuator must be in fully open position or removed. The measuring points are self-sealing.
Remove the caps and insert the probes through the seals. After measuring replace the caps.

KTCM 512 LF (low flow)

Position	Flow [l/h]	Kv
1	35	0,06
2	45	0,10
3	75	0,16
4	105	0,23
5	135	0,28
6	160	0,35
7	170	0,37
8	180	0,40
9	195	0,44
10	210	0,47

KTCM 512 NF (normal flow)

Position	Flow [l/h]	Kv
1	70	0,15
2	85	0,18
3	115	0,22
4	195	0,40
5	290	0,61
6	350	0,78
7	410	0,96
8	550	1,20
9	710	1,62
10	800	1,90

KTCM 512 HF (high flow)

Position	Flow [l/h]	Kv
1	100	0,19
2	125	0,21
3	150	0,29
4	265	0,40
5	405	0,61
6	505	0,78
7	605	0,96
8	775	1,20
9	1025	1,62
10	1150	1,90

Recommended setting: Position 3-10

Measuring accuracy

Kv deviation at different settings

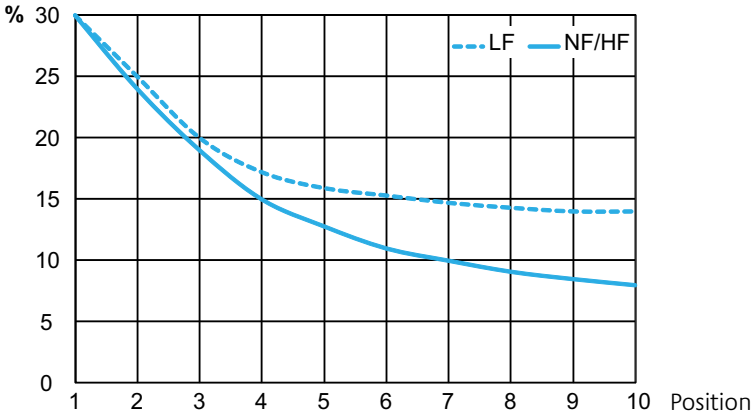

Articles

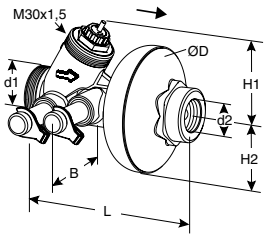

Male thread x female thread

Threads according to ISO 228

Fc = 20 kPa

Article No	DN	d1	d2	D	L	H1	H2	B	Kvd	Q_{max} [l/h]	Kg
KTCM 512 LF (low flow)											
52 798-415	15	G1	G1/2	78	110	53	39	58	4	210	0,9
52 798-420	20	G1	G3/4	78	110	53	39	58	4	210	0,9
KTCM 512 NF (normal flow)											
52 798-515	15	G1	G1/2	78	110	53	39	58	4	800	0,9
52 798-520	20	G1	G3/4	78	110	53	39	58	4	800	0,9

Fc = 40 kPa

Article No	DN	d1	d2	D	L	H1	H2	B	Kvd	Q_{max} [l/h]	Kg
KTCM 512 HF (high flow)											
52 798-615	15	G1	G1/2	78	110	53	39	58	4	1 150	0,9
52 798-620	20	G1	G3/4	78	110	53	39	58	4	1 150	0,9

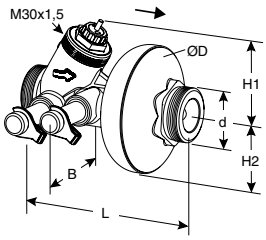

Male thread

Threads according to ISO 228

Fc = 20 kPa

Article No	DN	d	D	L	H1	H2	B	Kvd	Q_{max} [l/h]	Kg
KTCM 512 LF (low flow)										
52 792-120	20	G1	78	110	53	39	58	4	210	0,9
KTCM 512 NF (normal flow)										
52 792-320	20	G1	78	110	53	39	58	4	800	0,9

Fc = 40 kPa

Article No	DN	d	D	L	H1	H2	B	Kvd	Q_{max} [l/h]	Kg
KTCM 512 HF (high flow)										
52 795-920	20	G1	78	110	53	39	58	4	1 150	0,9

→ = Flow direction

Kvd = Is the Kv value of the differential pressure control component when fully open.

Connections

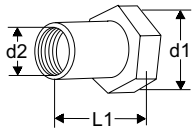

With female thread
Threads according to ISO 228

Article No	EAN	d1	d2	L1*
52 759-015	7318793546609	G1	G1/2	26
52 759-020	7318793546708	G1	G3/4	32

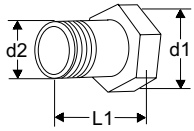

With male thread
Threads according to ISO 7

Article No	EAN	d1	d2	L1*
52 759-115		G1	R1/2	34
52 759-120		G1	R3/4	40

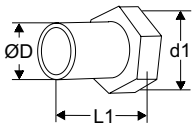

For welding

Article No	EAN	d1	D	L1*
52 759-315	7318793547200	G1	20,8	37
52 759-320	7318793547309	G1	26,3	42

*) Fitting length (from the gasket surface to the end of the connection).

Accessories

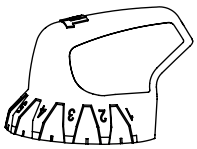

Presetting tool
For TBV-C, TBV-CM, TBV-CMP, KTCM 512

Article No	EAN
52 133-100	7318793886002

Actuator TSE-M
24V AC
For more details of TSE-M, see separate catalogue leaflet.

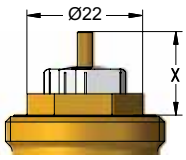

KTCM 512 is developed to work together with the TSE-M actuator. Actuators of other brands require a working range of:

X = 11,50 - 15,80 (closed - fully open)

Tour & Andersson (TA) will not be held responsible for the control function if actuators other than TSE-M are used.

6-10-27 KTCM 512 09.2011

KTCM 512 DN 15/20

TA

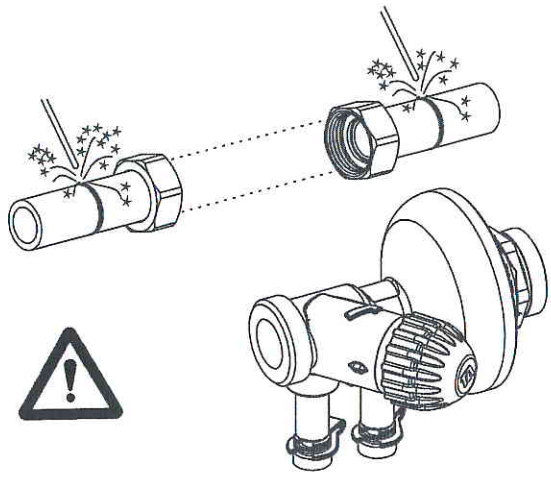

1

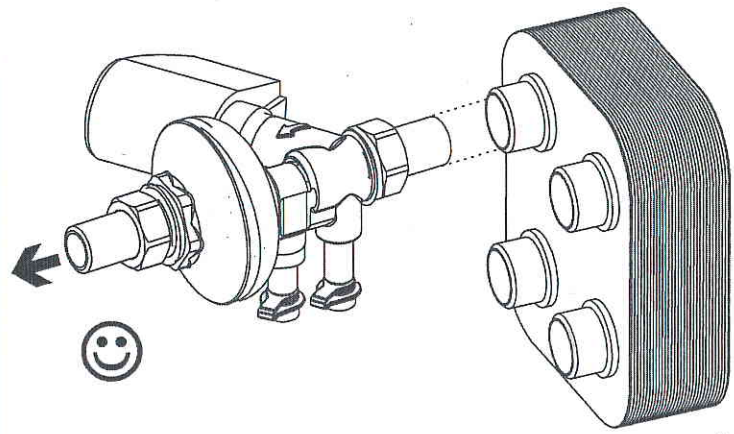

2

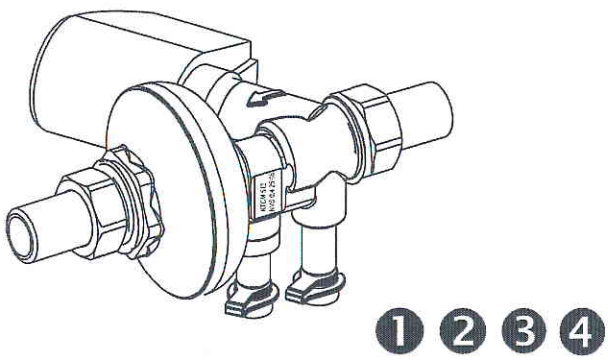

3

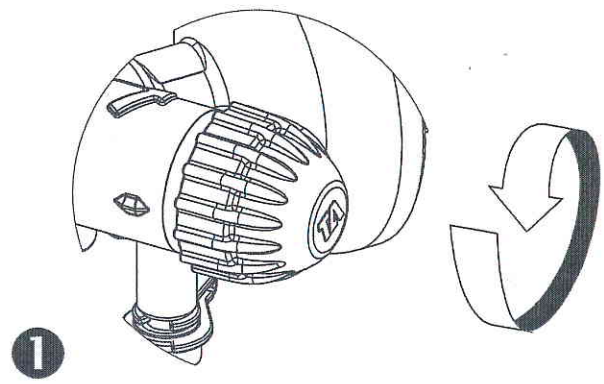

4

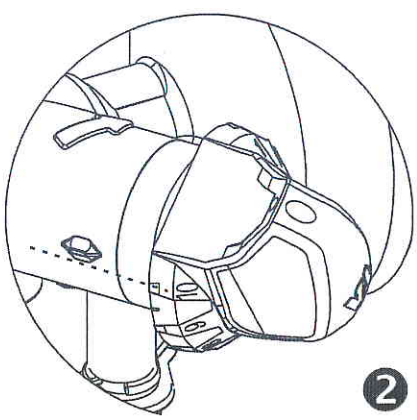

5

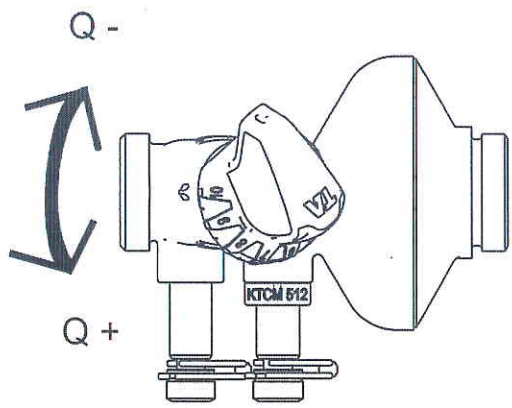

Position	LF Low Flow (l/h)	NF Normal Flow (l/h)	HF High Flow (l/h)
1	35	70	125
2	45	85	135
3	75	115	180
4	105	195	265
5	135	290	405
6	160	350	505
7	170	410	605
8	180	550	775
9	195	710	1025
10	210	800	1150

6

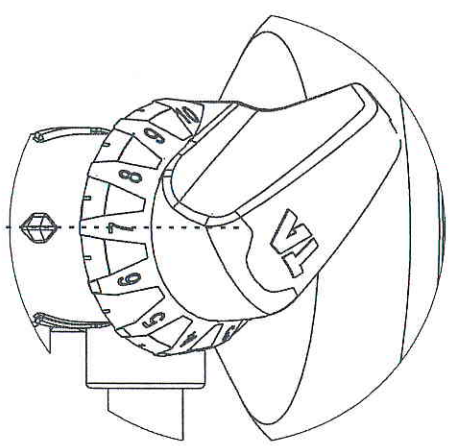

7

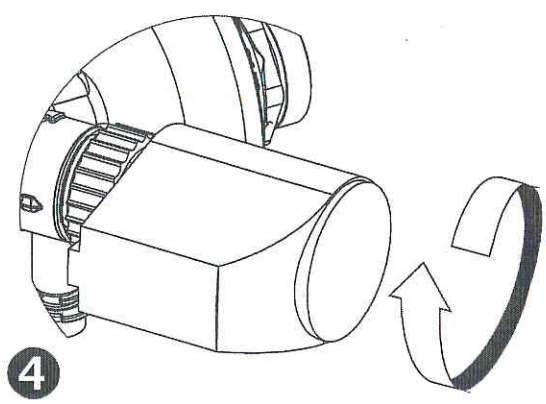

8

Approved by:

8596 - Navodilo (smeško) KTCM 512 DN 15/20 by Alen Jerman 01.06.2011 - Rev. A

\\Server13. Razvoj\DESIGN\URADNO\OBDELAVA\299