IMI TA

TA-FUS1ON-C

Combined control & balancing valves

With independent EQM characteristics

Engineering GREAT Solutions

IMI Hydronic Engineering

TA-FUS1ON-C

These innovative control and balancing valves for heating and cooling systems combine the key hydronic functions of control and balancing in one valve. Adjustable Kvs and inherent independent EQM characteristics allow correct valve sizing and optimum system controllability. The measuring points enable accurate measurement of flow, differential pressure, temperature and available differential pressure.

Key features

- **Adjustable Kvs**
  Allows correct Kvs setting corresponding to system requirements.
- **Independent, inherent EQM characteristic**
  Proper EQM valve characteristic for all settings.
- **Self-sealing measuring points**
  Simple and accurate measurement for balancing, trouble shooting and power measurement.
- **Actuators**
  Valves and actuators supplied together ensuring optimum control performance and simplified selection.

Technical description

Application:
Heating and cooling systems.

Functions:
Control (EQM)
Balancing
Pre-setting (Kvs)
Measuring (ΔpV, ΔH, T, q)
Shut-off (for isolation during system maintenance)

Dimension:
DN 32-150

Pressure class:
DN 32-50: PN 16
DN 65-150: PN 16 and PN 25

Max. differential pressure (ΔpV):
DN 32-50: 350 kPa = 3,5 bar
DN 65-150: 400 kPa = 4 bar

Recommended setting range (Kv_{max}):
DN 32: 2,68-12,9
DN 40: 3,03-18,5
DN 50: 8,03-33,0
DN 65: 25,5-65,4
DN 80: 35,9-100
DN 100: 57,4-160
DN 125: 97,4-270
DN 150: 146-400
Kv_{max} = m³/h at a pressure drop of 1 bar at each setting and fully open valve plug.

Lift:
20 mm

Rangeability:
>100 (for all recommended settings)

Leakage rate:
Tight sealing

Characteristics:
Independent EQM.

Temperature:
Max. working temperature: 120°C
Min. working temperature: -20°C

Media:
Water or neutral fluids, water-glycol mixtures.
(For other media contact IMI Hydronic Engineering.)

Material:
DN 32-50:
Valve body: AMETAL®
Valve plug: AMETAL®
Seat seal: EPDM/Stainless steel
Spindle seal: EPDM O-ring
O-rings: EPDM
Valve insert: AMETAL®/PPS/PTFE
Springs: Stainless steel
Spindle: Stainless steel
DN 65-150:
Valve body: Ductile iron EN-GJS-400
Valve plug: Stainless steel
Seat seal: EPDM/Stainless steel
O-rings: EPDM
Plug mechanism: Stainless steel and brass
Screws and nuts: Stainless steel

AMETAL® is the dezincification resistant alloy of IMI Hydronic Engineering.

Surface treatment:
DN 32-50: Non treated
DN 65-150: Electrophoretic painting.

Marking:
DN 32-50: TAH, IMI, DN, PN, DR, serial No and flow direction arrow.
DN 65-150: TAH, IMI, DN, PN, Kvs, T_{min}/$_{max}$, serial number, valve body material and flow direction arrow, label.
CE-marking:
DN 65-125: CE
DN 150: CE 0062 *
*) Notified body.

Connection:
DN 32-50: Female thread according to ISO 228. Thread length according to ISO 7/1.
DN 65-150: Flanges according to EN-1092-2, type 21. Face to face length according to EN 558 series 3.

Operating function DN 32-50

Setting DN 32-50

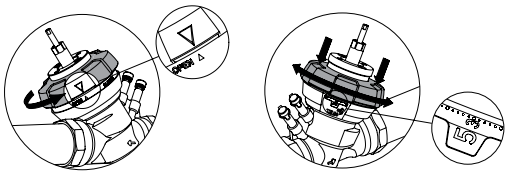

1. Open the valve **fully** with the handwheel.
2. Press the handwheel downwards and turn to desired value, e.g. 5.3.

Shut-off DN 32-50

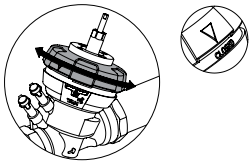

1. Turn the handwheel to “Closed”.

Turn the handwheel to “Open” when re-opening the valve.

Measuring ΔpV and q DN 32-50

Connect IMI Hydronic Engineering balancing instrument to the measuring points. Input the valve type, size and setting and the actual flow is displayed.

Measuring ΔH DN 32-50

Connect IMI Hydronic Engineering balancing instrument to the measuring points. Close the valve according to “Shut-off” and measure. **Important!** The valve must be re-opened **fully** after the measurement is completed.

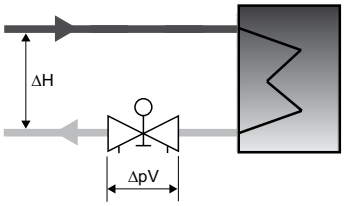

NOTE!
Ensure that the actuator is disengaged from the valve spindle during all operating functions described above.

Operating function DN 65-150

Setting DN 65-150

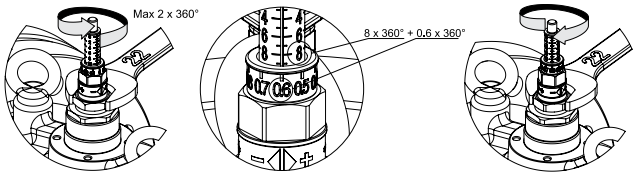

1. Release the fixing nut.
2. Turn the setting screw to desired value on the scale, e.g. 8.6.
3. Tighten the fixing nut.

Shut-off DN 65-150

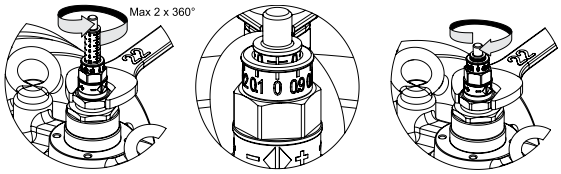

1. Release the fixing nut.
2. Turn the setting screw clockwise to stop (position 0 ±0.5). The presetting is visible on the setting scale.
3. Tighten the fixing nut.

Open to **previous setting** when re-opening the valve.

Measuring ΔpV and q DN 65-150

Connect IMI Hydronic Engineering balancing instrument to the measuring points. Input the valve type, size and setting and the actual flow is displayed.

Measuring ΔH DN 65-150

Connect IMI Hydronic Engineering balancing instrument to the measuring points. Close the valve according to “Shut-off” and measure. **Important!** The valve must be re-opened to **previous setting** after the measurement is completed.

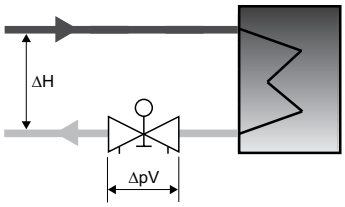

NOTE!
Ensure that the actuator is disengaged from the valve spindle during all operating functions described above.

Valve characteristics

DN 32-50

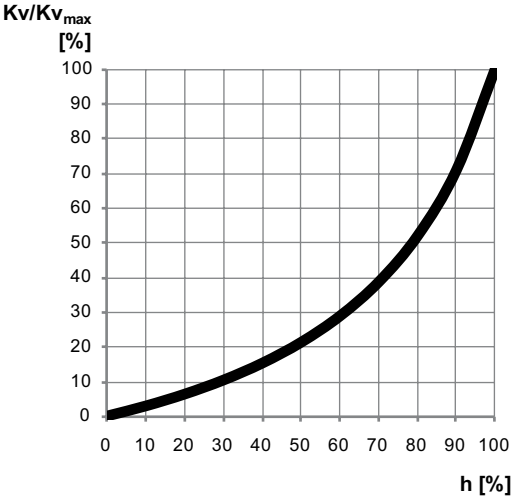

DN 65-150

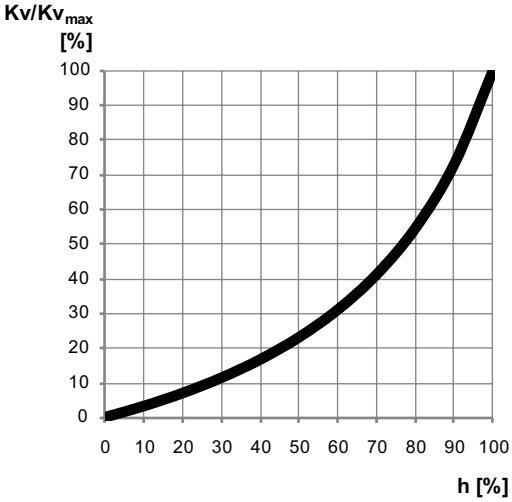

Nominal valve characteristic for all recommended settings.

Measuring accuracy

Maximum flow deviation at different settings

DN 32-50

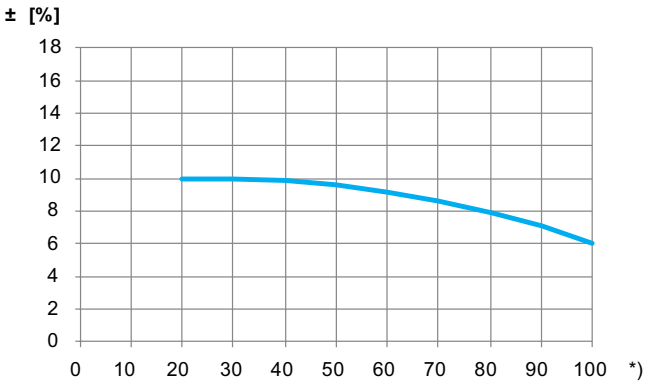

DN 65-150

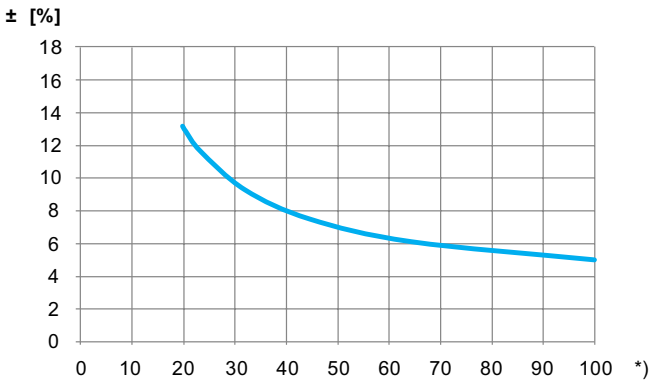

*) Setting (%) of fully open valve.

Correction factors

The flow calculations are valid for water (+20°C). For other liquids with approximately the same viscosity as water (≤20 cSt = 3°E=100S.U.), it is only necessary to compensate for the specific density. However, at low temperatures, the viscosity increases and laminar flow may occur in the valves. This causes a flow deviation that increases with small valves, low settings and low differential pressures. Correction for this deviation can be made with the software TA Select or directly in our balancing instruments.

Noise

In order to avoid noise in the installation the flows must be correctly balanced and the water de-aerated.
Very high differential pressures can cause noise in the installations, and in that case, differential pressure controllers should be used.

The maximum recommended pressure drop in order to avoid excessive noise is 200 kPa.

Closing force

Necessary force (F) to close the valve versus the differential pressure (ΔpV), up to max. ΔpV.

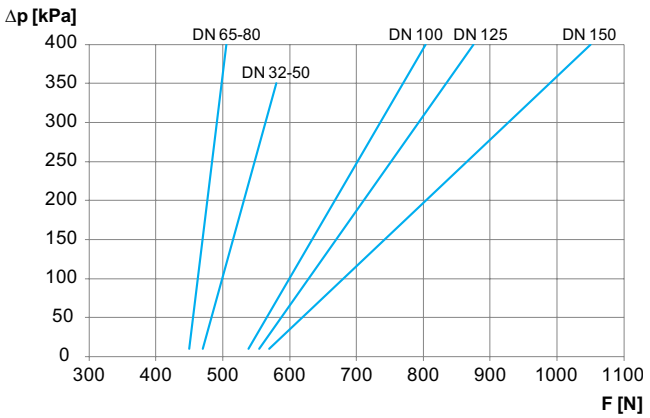

Kv_{max} values

	Positions									
	1	**2**	**3**	**4**	**5**	**6**	**7**	**8**	**9**	**10**
DN 32	2,68	3,15	3,75	4,45	5,37	6,51	7,93	9,55	11,1	12,9
DN 40	3,03	3,63	4,53	5,70	7,07	8,88	11,1	13,0	15,4	18,5
DN 50	8,03	9,74	11,9	14,4	17,0	20,0	23,3	27,3	30,4	33,0

	Positions									
	5.5	6	*6.5*	*7*	**7.5**	**8**	**8.5**	**9**	**9.5**	**10**
DN 65	*13,0*	*15,5*	*18,4*	*21,8*	25,5	29,6	35,2	42,9	53,0	65,4
DN 80	*18,6*	*22,5*	*25,7*	*30,0*	35,9	43,0	51,8	63,9	79,6	100
DN 100	*29,1*	*34,5*	*40,9*	*48,4*	57,4	68,6	82,6	101	125	160
DN 125	*49,5*	*58,6*	*69,4*	*82,1*	97,4	116	140	170	212	270
DN 150	*74,5*	*88,1*	*104*	*123*	146	173	208	253	314	400

DN 65-150: Recommended setting range 7.5–10 (≈40–100% of Kvs).
Kv_{max} = m³/h at a pressure drop of 1 bar at each setting and fully open valve plug.

Sizing

When ΔpV and flow are known, use the formula to calculate Kv_{max}.

$$Kv = 0{,}01 \frac{q}{\sqrt{\Delta p}} \qquad q\ l/h,\ \Delta p\ kPa$$

$$Kv = 36 \frac{q}{\sqrt{\Delta p}} \qquad q\ l/s,\ \Delta p\ kPa$$

Example
Flow is 10 m³/h, ΔpV is 35 kPa and control signal (input signal) 0-10 VDC.

1. Go to sizing diagram (When calculating the Kv_{max} by the formula go directly to step 4).
2. Draw a straight line between 10 m³/h and 35 kPa.
3. Read the needed Kv_{max} value where the line crosses the Kv-axis. In this case Kv_{max}=16,9
4. Draw a horizontal line from Kv_{max} 16,9, which will cross the setting bars for all valves which fit the application. In this case DN 40 setting 9,5, DN 50 setting 5,0.
5. Choose the smallest option (with some safety margin). In this case DN 50 is preferable.
6. Go to the selection tables to select the correct set. In this case article number 22106-031050.

Note
If the required flow falls outside the scale of the diagram, the reading can be made as follows: Use the design ΔpV and draw the line to a flow that is 0,1 or 10 times the design flow, getting Kv_{max} in the same relation (either 0,1 or 10 times needed).
Following the previous example
35 kPa and 10 m³/h gives Kv_{max}=16,9
35 kPa and 1 m³/h gives Kv_{max}=1,69
35 kPa and 100 m³/h gives Kv_{max}=169

Sizing diagram

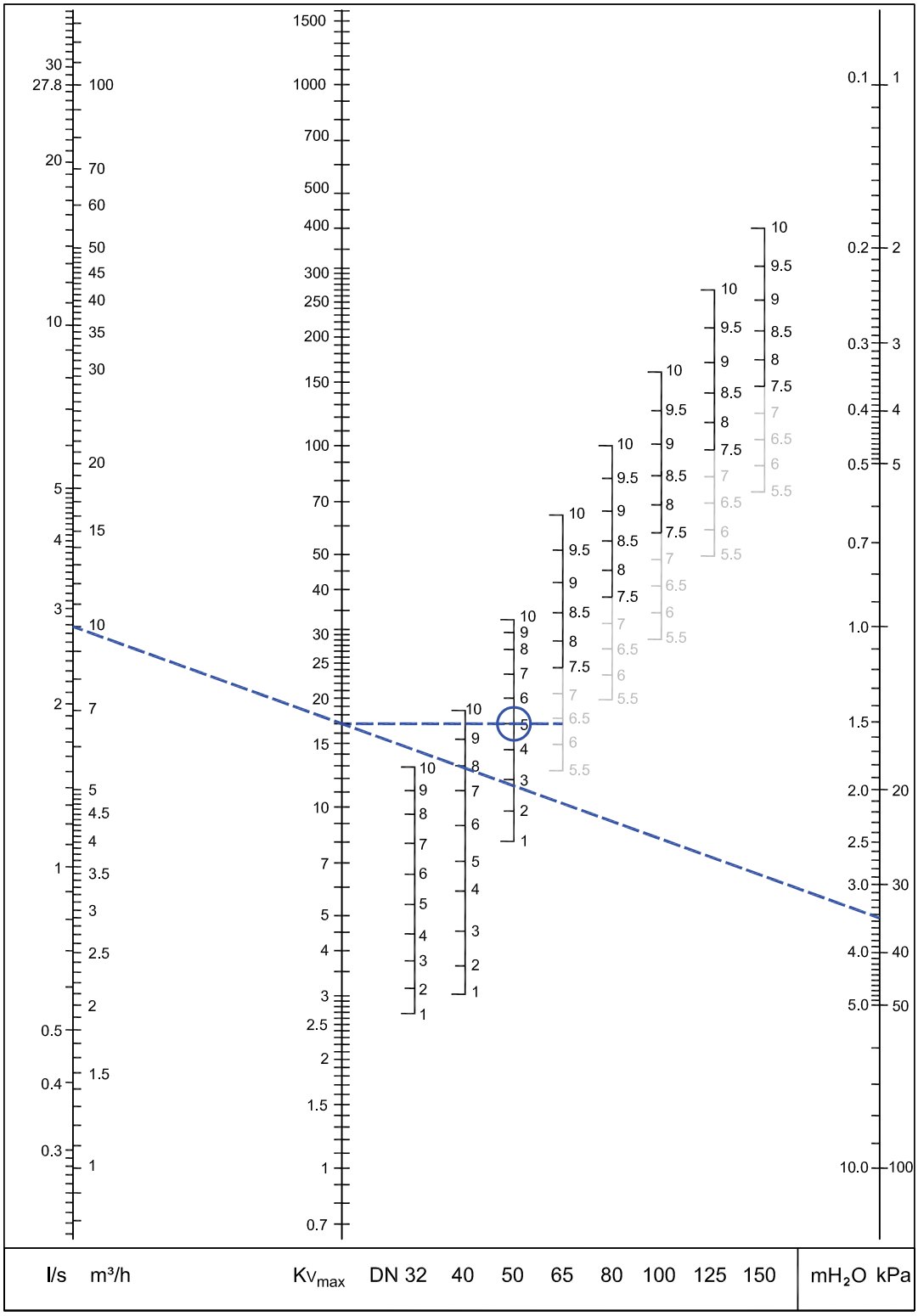

DN 65-150: Recommended setting range 7.5–10 (≈40–100% of Kvs).

Installation

Application examples

2-way direct circuit

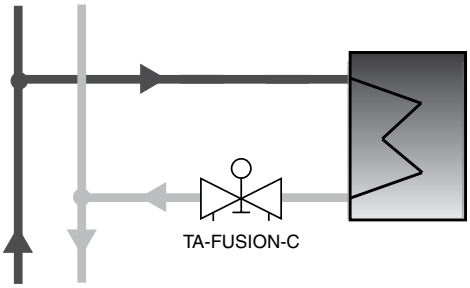

Injection circuit

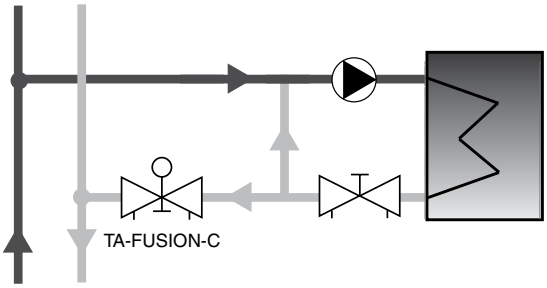

Normal pipe fittings

Avoid mounting taps and pumps immediately before or after the valve.
Installation recommendation for accurate measurement due to distortion of fully developed turbulent flow profile.

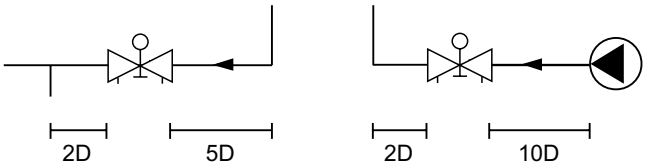

Flow direction

DN 32-50 DN 65-150

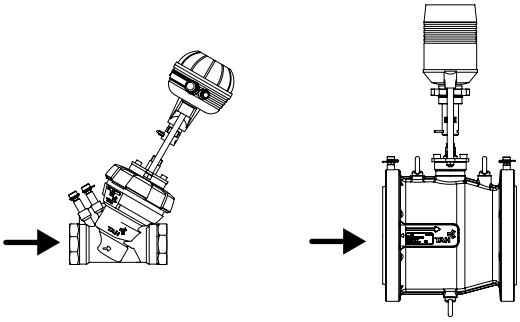

Installation of actuator

Approx. 140 mm of free space is required above the actuator.

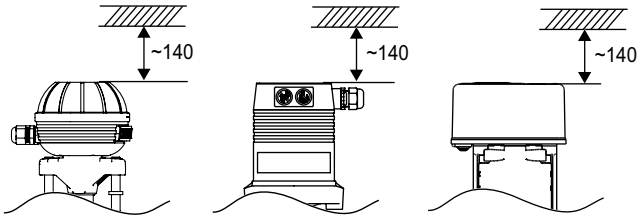

Enclosure class

Automatic operation: IP 54
(Manual operation TA-MC55: IP 30)
Note: Read carefully the installation instruction of the actuator. Intended for indoor installation applications. For outdoor installation applications please contact IMI Hydronic Engineering. In cooling systems, the pipe and valve must be insulated.

DN 32-50

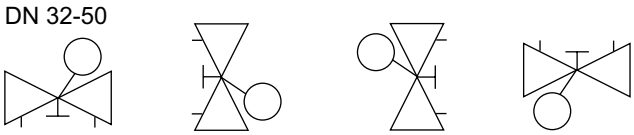

DN 65-150

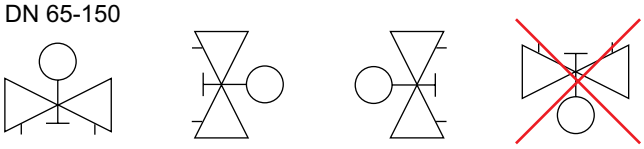

Actuators

A wide range of high performance proportional actuators are available from IMI Hydronic Engineering (e.g. 24V, 230V, fail safe) to provide accurate modulating or 3-point control, when used together with combined control and balancing valves. See “Selection tables”.

For more details on actuators, see related technical leaflet “TA-MC Actuators” or contact IMI Hydronic Engineering.

Selection tables

Valves and actuators are supplied together ensuring optimum control and simplified selection.
The codes in the selection tables are for different sets of valve size (DN) and type of actuator. All fail safe and non-fail safe sets are able to close off (or fail safe open) against 0–max. ΔpV (350-400 kPa).
For more details on actuators, see related technical leaflet "TA-MC Actuators" or contact IMI Hydronic Engineering.

Article number: 22106-xxxxxx
To get the complete article number, simply add the code stated below according to your required set.
Example: 22106-031032
Product codes in *italics* are with additional actuator functionalities.

			TA-MC55Y	TA-MC55	TA-MC55	TA-MC100/160 [3]	TA-MC100/160 [3]
	Input signal: [1]		0(2)-10 VDC / 0(4)-20 mA	3-point	3-point	0(2)-10 VDC / 0(4)-20 mA and 3-point	0(2)-10 VDC / 0(4)-20 mA and 3-point
	Output signal: [1]		0-10 VDC	0-10 VDC	0-10 VDC	0-10 VDC (0(4)-20 mA) [2]	0-10 VDC (0(4)-20 mA) [2]
	Supply voltage:		24 V	24 V	230 V	24 V	230 V
	Fail safe:		No	No	No	No	No
DN	**PN**	**Kvs**					
32	16	12,9	031032	011032	021032	*041032*	*051032*
40	16	18,5	031040	011040	021040	*041040*	*051040*
50	16	33,0	031050	011050	021050	*041050*	*051050*
65	16	65,4	032065	012065	022065	*042065*	*052065*
65	25	65,4	033065	013065	023065	*043065*	*053065*
80	16	100	032080	012080	022080	*042080*	*052080*
80	25	100	033080	013080	023080	*043080*	*053080*
100	16	160	-	-	-	042100	052100
100	25	160	-	-	-	043100	053100
125	16	270	-	-	-	042125	052125
125	25	270	-	-	-	043125	053125
150	16	400	-	-	-	062150	072150
150	25	400	-	-	-	063150	073150

1) Invertable input and output signal
2) Output signal: 0(4)-20 mA on request (accessory), please contact IMI Hydronic Engineering.
3) TA-MC160 required for sets with DN 150 only.

DN 32-50: Female threaded
DN 65-150: Flanged

With fail safe actuators

			TA-MC100FSE	TA-MC100FSR	TA-MC100 FSE	TA-MC100 FSR
	Input signal:		0(2)-10 VDC / 0(4)-20 mA and 3-point	0(2)-10 VDC / 0(4)-20 mA and 3-point	3-point	3-point
	Output signal:		0(2)-10 VDC 0(4)-20 mA	0(2)-10 VDC 0(4)-20 mA	0-10 VDC	0-10 VDC
	Supply voltage:		24 V	24 V	230 V	230 V
	Fail safe:		Extending (closing)	Retracting (opening)	Extending (closing)	Retracting (opening)
DN	**PN**	**Kvs**				
32	16	12,9	081032	091032	101032	111032
40	16	18,5	081040	091040	101040	111040
50	16	33,0	081050	091050	101050	111050
65	16	65,4	082065	092065	102065	112065
65	25	65,4	083065	093065	103065	113065
80	16	100	082080	092080	102080	112080
80	25	100	083080	093080	103080	113080
100	16	160	082100	092100	102100	112100
100	25	160	083100	093100	103100	113100
125	16	270	082125	092125	102125	112125
125	25	270	083125	093125	103125	113125

150*	16	400	-	-	-	-
150*	25	400	-	-	-	-

*) For DN 150 with fail safe actuator, please contact IMI Hydronic Engineering.

DN 32-50: Female threaded
DN 65-150: Flanged

Selection tables – individual components

The valve and actuator sets detailed previously ensure optimum control and simplified selection and are therefore the recommended option. Under certain circumstances however, for example when delivery to site is required on different dates, the individual set components may be ordered using the following table;

DN	**PN**	**Article No** (for individual valve)	**Article No – Adapter for actuator**			
			TA-MC55Y/TA-MC55	**TA-MC100**	**TA-MC160**	**TA-MC100 FSE/FSR**
32	16	22106-001032	–	–	n. a.	–
40	16	22106-001040	–	–	n. a.	–
50	16	22106-001050	–	–	n. a.	–
65	16	22106-002065	22413-001055	22413-001055	n. a.	22413-001055
65	25	22106-003065	22413-001055	22413-001055	n. a.	22413-001055
80	16	22106-002080	22413-001055	22413-001055	n. a.	22413-001055
80	25	22106-003080	22413-001055	22413-001055	n. a.	22413-001055
100	16	22106-002100	n. a.	22413-001055	n. a.	22413-001055
100	25	22106-003100	n. a.	22413-001055	n. a.	22413-001055
125	16	22106-002125	n. a.	22413-001055	n. a.	22413-001055
125	25	22106-003125	n. a.	22413-001055	n. a.	22413-001055
150	16	22106-002150	n. a.	n. a.	22413-001160	FSE on request FSR n. a.
150	25	22106-003150	n. a.	n. a.	22413-001160	FSE on request FSR n. a.

– = Adapter supplied together with the valve.
n. a. = Not applicable.

Articles

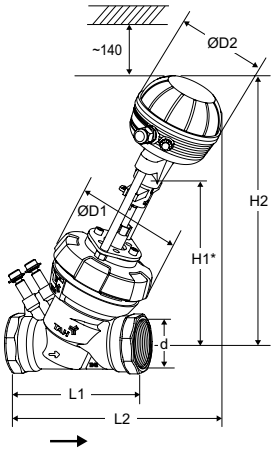

DN 32-50 Female threads

0(2)-10 VDC / 0(4)-20 mA, 24 V (TA-MC55Y)

DN	d	D1	D2	L1	L2	H1*	H2	Kvs	Kg	EAN	Article No
PN 16											
32	G1 1/4	128	109	153	273	186	326	12,9	4,9	5901688820032	22106-031032
40	G1 1/2	128	109	159	273	186	326	18,5	5,0	5901688820063	22106-031040
50	G2	128	109	167	281	190	330	33,0	5,5	5901688820094	22106-031050

3-point, 24 V (TA-MC55)

DN	d	D1	D2	L1	L2	H1*	H2	Kvs	Kg	EAN	Article No
PN 16											
32	G1 1/4	128	109	153	273	186	326	12,9	4,9	5901688820018	22106-011032
40	G1 1/2	128	109	159	273	186	326	18,5	5,0	5901688820049	22106-011040
50	G2	128	109	167	281	190	330	33,0	5,5	5901688820070	22106-011050

3-point, 230 V (TA-MC55)

DN	d	D1	D2	L1	L2	H1*	H2	Kvs	Kg	EAN	Article No
PN 16											
32	G1 1/4	128	109	153	273	186	326	12,9	4,9	5901688820025	22106-021032
40	G1 1/2	128	109	159	273	186	326	18,5	5,0	5901688820056	22106-021040
50	G2	128	109	167	281	190	330	33,0	5,5	5901688820087	22106-021050

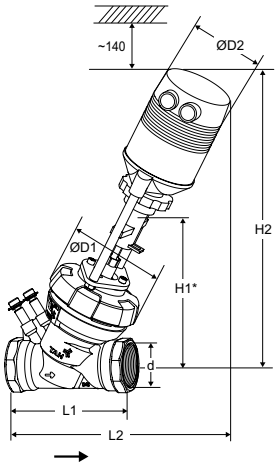

0(2)-10 VDC / 0(4)-20 mA and 3-point, 24 V (TA-MC100) [1)]

DN	d	D1	D2	L1	L2	H1*	H2	Kvs	Kg	EAN	Article No
PN 16											
32	G1 1/4	128	103	153	320	186	398	12,9	5,9	5901688820100	22106-041032
40	G1 1/2	128	103	159	321	186	398	18,5	6,0	5901688820124	22106-041040
50	G2	128	103	167	325	190	402	33,0	6,5	5901688820148	22106-041050

0(2)-10 VDC / 0(4)-20 mA and 3-point, 230 V (TA-MC100) [1)]

DN	d	D1	D2	L1	L2	H1*	H2	Kvs	Kg	EAN	Article No
PN 16											
32	G1 1/4	128	103	153	320	186	398	12,9	5,9	5901688820117	22106-051032
40	G1 1/2	128	103	159	321	186	398	18,5	6,0	5901688820131	22106-051040
50	G2	128	103	167	325	190	402	33,0	6,5	5901688820155	22106-051050

*) Height to the spindle top (for threaded valves).
1) Actuators with additional functionalities, such as position switches, output signal 0(4)-20 mA, see related technical leaflet “TA-MC Actuators”.
→ = Flow direction

Actuators in all sets are sized for actuation up to max. ΔpV.

Valve and actuator are individually packaged for easy handling on site.

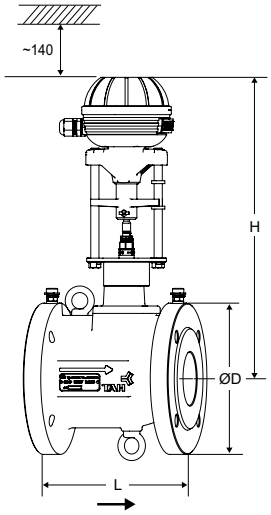

DN 65-150 With flanges

0(2)-10 VDC / 0(4)-20 mA, 24 V (TA-MC55Y)

DN	D	L	H	Kvs	Kg	EAN	Article No
PN 16							
65	185	190	365	65,4	19	5901688820339	22106-032065
80	200	203	365	100	23	5901688820421	22106-032080
PN 25							
65	185	190	365	65,4	19	5901688820360	22106-033065
80	200	203	365	100	23	5901688820452	22106-033080

3-point, 24 V (TA-MC55)

DN	D	L	H	Kvs	Kg	EAN	Article No
PN 16							
65	185	190	365	65,4	19	5901688820315	22106-012065
80	200	203	365	100	23	5901688820407	22106-012080
PN 25							
65	185	190	365	65,4	19	5901688820346	22106-013065
80	200	203	365	100	23	5901688820438	22106-013080

3-point, 230 V (TA-MC55)

DN	D	L	H	Kvs	Kg	EAN	Article No
PN 16							
65	185	190	365	65,4	19	5901688820322	22106-022065
80	200	203	365	100	23	5901688820414	22106-022080
PN 25							
65	185	190	365	65,4	19	5901688820353	22106-023065
80	200	203	365	100	23	5901688820445	22106-023080

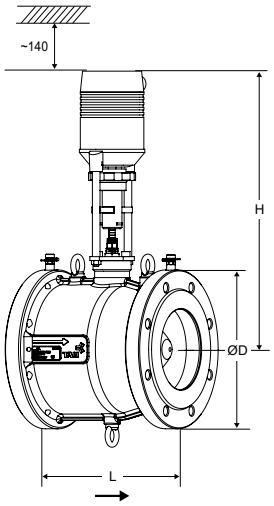

0(2)-10 VDC / 0(4)-20 mA and 3-point, 24 V (TA-MC100) [1)]

DN	D	L	H	Kvs	Kg	EAN	Article No
PN 16							
65	185	190	438	65,4	20	5901688820483	22106-042065
80	200	203	438	100	24	5901688820544	22106-042080
100	220	229	438	160	30	5901688820841	22106-042100
125	250	254	438	270	40	5901688820902	22106-042125
PN 25							
65	185	190	438	65,4	20	5901688820506	22106-043065
80	200	203	438	100	24	5901688820568	22106-043080
100	235	229	438	160	30	5901688820865	22106-043100
125	270	254	438	270	40	5901688820926	22106-043125

0(2)-10 VDC / 0(4)-20 mA and 3-point, 230 V (TA-MC100) [1)]

DN	D	L	H	Kvs	Kg	EAN	Article No
PN 16							
65	185	190	463	65,4	20	5901688820490	22106-052065
80	200	203	463	100	24	5901688820551	22106-052080
100	220	229	463	160	30	5901688820858	22106-052100
125	250	254	463	270	40	5901688820919	22106-052125
PN 25							
65	185	190	463	65,4	20	5901688820513	22106-053065
80	200	203	463	100	24	5901688820575	22106-053080
100	235	229	463	160	30	5901688820872	22106-053100
125	270	254	463	270	40	5901688820933	22106-053125

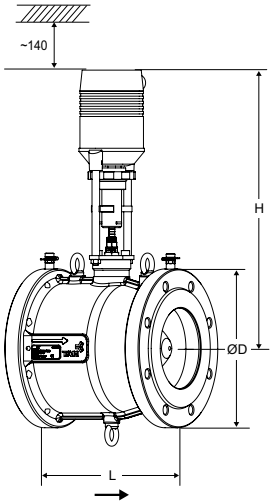

0(2)-10 VDC / 0(4)-20 mA and 3-point, 24 V (TA-MC160) [1]

DN	D	L	H	Kvs	Kg	EAN	Article No
PN 16							
150	285	267	533	400	53	5901688820964	22106-062150
PN 25							
150	300	267	533	400	53	5901688820988	22106-063150

0(2)-10 VDC / 0(4)-20 mA and 3-point, 230 V (TA-MC160) [1]

DN	D	L	H	Kvs	Kg	EAN	Article No
PN 16							
150	285	267	558	400	53	5901688820971	22106-072150
PN 25							
150	300	267	558	400	53	5901688820995	22106-073150

1) Actuators with additional functionalities, such as position switches, output signal 0(4)-20 mA, see related technical leaflet “TA-MC Actuators”.
→ = Flow direction

Actuators in all sets are sized for actuation up to max. ΔpV.

Valve and actuator are individually packaged for easy handling on site.

Articles – Fail-safe, extending (closing)

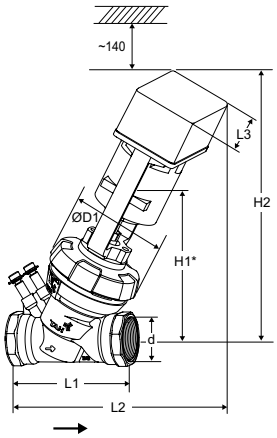

DN 32-50 Female threads

0(2)-10 VDC / 0(4)-20 mA and 3-point, 24 V (TA-MC100FSE)

DN	d	D1	L1	L2	L3	H1*	H2	Kvs	Kg	EAN	Article No
PN 16											
32	G1 1/4	128	153	319	141	186	356	12,9	6,2	5901688820162	22106-081032
40	G1 1/2	128	159	319	141	186	356	18,5	6,3	5901688820209	22106-081040
50	G2	128	167	324	141	190	360	33,0	6,8	5901688820247	22106-081050

0(2)-10 VDC / 0(4)-20 mA and 3-point, 230 V (TA-MC100FSE)

DN	d	D1	L1	L2	L3	H1*	H2	Kvs	Kg	EAN	Article No
PN 16											
32	G1 1/4	128	153	319	141	186	356	12,9	6,2	5901688820186	22106-101032
40	G1 1/2	128	159	319	141	186	356	18,5	6,3	5901688820223	22106-101040
50	G2	128	167	324	141	190	360	33,0	6,8	5901688820261	22106-101050

*) Height to the spindle top (for threaded valves).

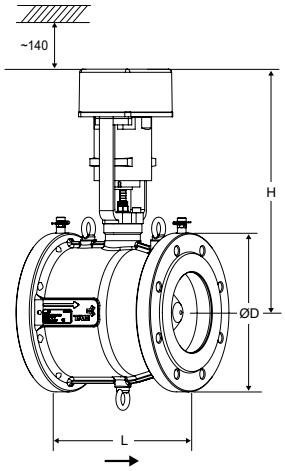

DN 65-150 With flanges

0(2)-10 VDC / 0(4)-20 mA and 3-point, 24 V (TA-MC100FSE)

DN	D	L	H	Kvs	Kg	EAN	Article No
PN 16							
65	185	190	382	65,4	20	5901688820629	22106-082065
80	200	203	382	100	24	5901688820742	22106-082080
100	220	229	382	160	30	5901688821046	22106-082100
125	250	254	382	270	40	5901688821169	22106-082125
PN 25							
65	185	190	382	65,4	20	5901688820667	22106-083065
80	200	203	382	100	24	5901688820780	22106-083080
100	235	229	382	160	30	5901688821084	22106-083100
125	270	254	382	270	40	5901688821206	22106-083125

0(2)-10 VDC / 0(4)-20 mA and 3-point, 230 V (TA-MC100FSE)

DN	D	L	H	Kvs	Kg	EAN	Article No
PN 16							
65	185	190	382	65,4	20	5901688820643	22106-102065
80	200	203	382	100	24	5901688820766	22106-102080
100	220	229	382	160	30	5901688821060	22106-102100
125	250	254	382	270	40	5901688821183	22106-102125
PN 25							
65	185	190	382	65,4	20	5901688820681	22106-103065
80	200	203	382	100	24	5901688820803	22106-103080
100	235	229	382	160	30	5901688821107	22106-103100
125	270	254	382	270	40	5901688821220	22106-103125

DN 150 with fail safe actuator, please contact IMI Hydronic Engineering.

→ = Flow direction

Actuators in all sets are sized for actuation up to max. ΔpV.

Valve and actuator are individually packaged for easy handling on site.

Articles – Fail-safe, retracting (opening)

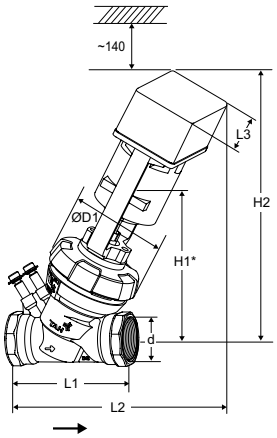

DN 32-50 Female threads

0(2)-10 VDC / 0(4)-20 mA and 3-point, 24 V (TA-MC100FSR)

DN	d	D1	L1	L2	L3	H1*	H2	Kvs	Kg	EAN	Article No
PN 16											
32	G1 1/4	128	153	319	141	186	356	12,9	6,2	5901688820179	22106-091032
40	G1 1/2	128	159	319	141	186	356	18,5	6,3	5901688820216	22106-091040
50	G2	128	167	324	141	190	360	33,0	6,8	5901688820254	22106-091050

0(2)-10 VDC / 0(4)-20 mA and 3-point, 230 V (TA-MC100FSR)

DN	d	D1	L1	L2	L3	H1*	H2	Kvs	Kg	EAN	Article No
PN 16											
32	G1 1/4	128	153	319	141	186	356	12,9	6,2	5901688820193	22106-111032
40	G1 1/2	128	159	319	141	186	356	18,5	6,3	5901688820230	22106-111040
50	G2	128	167	324	141	190	360	33,0	6,8	5901688820278	22106-111050

*) Height to the spindle top (for threaded valves).

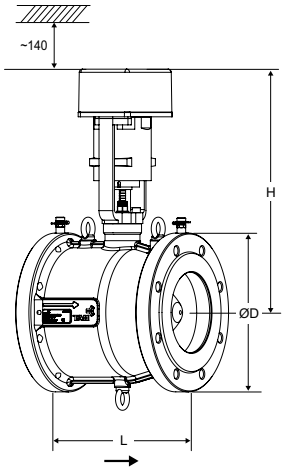

DN 65-125 With flanges

0(2)-10 VDC / 0(4)-20 mA and 3-point, 24 V (TA-MC100FSR)

DN	D	L	H	Kvs	Kg	EAN	Article No
PN 16							
65	185	190	382	65,4	20	5901688820636	22106-092065
80	200	203	382	100	24	5901688820759	22106-092080
100	220	229	382	160	30	5901688821053	22106-092100
125	250	254	382	270	40	5901688821176	22106-092125
PN 25							
65	185	190	382	65,4	20	5901688820674	22106-093065
80	200	203	382	100	24	5901688820797	22106-093080
100	235	229	382	160	30	5901688821091	22106-093100
125	270	254	382	270	40	5901688821213	22106-093125

0(2)-10 VDC / 0(4)-20 mA and 3-point, 230 V (TA-MC100FSR)

DN	D	L	H	Kvs	Kg	EAN	Article No
PN 16							
65	185	190	382	65,4	20	5901688820650	22106-112065
80	200	203	382	100	24	5901688820773	22106-112080
100	220	229	382	160	30	5901688821077	22106-112100
125	250	254	382	270	40	5901688821190	22106-112125
PN 25							
65	185	190	382	65,4	20	5901688820698	22106-113065
80	200	203	382	100	24	5901688820810	22106-113080
100	235	229	382	160	30	5901688821114	22106-113100
125	270	254	382	270	40	5901688821237	22106-113125

→ = Flow direction

Actuators in all sets are sized for actuation up to max. ΔpV.

Valve and actuator are individually packaged for easy handling on site.

Accessories

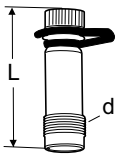

Measuring point

d	L	EAN	Article No
DN 32-50			
M14x1	44	7318792813207	52 179-014
M14x1	103	7318793858108	52 179-015
DN 65-150			
3/8	47	7318792813009	52 179-008
3/8	103	7318792814501	52 179-608

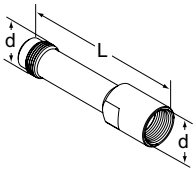

Extension for measuring point M14x1

Suitable when insulation is used.
For DN 32-50.

d	L	EAN	Article No
M14x1	71	7318793969507	52 179-016

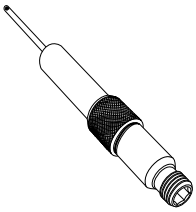

Measuring point

Extensions 60 mm.
Can be installed without draining of the system.
For all dimensions.

L	EAN	Article No
60	7318792812804	52 179-006

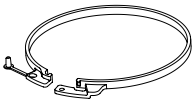

Tamper proof ring

For locking of set Kv_{max}.

For DN	EAN	Article No
32-50	7318794001800	22107-000001

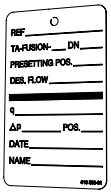

Identification tag

EAN	Article No
7318794001701	22107-000002

Insulation

See related insulation instruction under “Products & Solutions” on www.imi-hydronic.com or contact IMI Hydronic Engineering.

Actuators accessories

See related technical leaflet “TA-MC Actuators” or contact IMI Hydronic Engineering.

310 536-01
09.2014

IMI TA

TA-FUS1ON-C (DN 32-50)

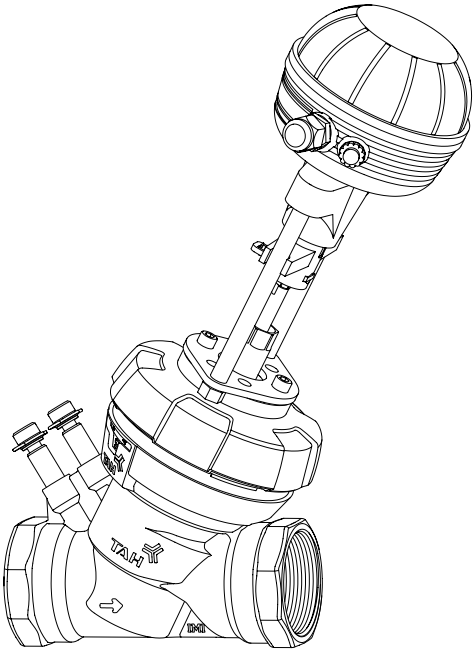

IMI Hydronic Engineering

Pos	Kv_{max} DN 32	DN 40	DN 50
1	2.68	3.03	8.03
2	3.15	3.63	9.74
3	3.75	4.53	11.9
4	4.45	5.70	14.4
5	5.37	7.07	17.0
6	6.51	8.88	20.0
7	7.93	11.1	23.3
8	9.55	13.0	27.3
9	11.1	15.4	30.4
10*	12.9	18.5	33.0

-20°C – +120°C

PN 16

Max. ΔpV = 350 kPa = 3.5 bar

Kv_{max} =

EN - m^3/h at a pressure drop of 1 bar at each setting and fully open valve plug.
DE - m^3/h bei einem Druckverlust von 1 bar bei der jeweiligen Einstellung und voll geöffnetem Regelkegel.
FR - m^3/h pour une pression différentielle de 1 bar, pour chaque réglage et vanne complètement ouverte.
NL - m^3/h bij een drukverschil van 1 bar, elke instelstand en volledig geopende afsluiter.
ES - m^3/h con una pérdida de carga de 1 bar, para cada ajuste, estando el obturador en la posición totalmente abierta.
PT - m^3/h a uma queda de pressão de 1 bar para cada ajuste e válvula totalmente aberta.
IT - m^3/h ad un calo di pressione di 1 bar ciascuna impostazione e con apertura totale della valvola.
RU - $м^3/ч$ при перепаде давления в 1 бар для каждой настройки и полностью поднятом штоке клапана.
HU - m^3/h, 1 bar nyomáskülönbség mellett minden előbeállítási értéknél és teljesen nyitott szelepállásnál.
PL - m^3/h przy spadku ciśnienia równym 1 bar dla każdej nastawy przy w pełni otwartym grzybku zaworu.
CS - průtok v m^3/h při tlakové ztrátě zcela otevřeného ventilu 1 bar.
SK - m^3/h pri tlakovej strate 1 bar, danom nastavení a plne otvorenom ventilu.
SL - m^3/h pri padcu tlaka za 1 bar pri vsaki nastavitvi in popolnoma odprtem vretenu.
RO - m^3/h pentru o cădere de presiune de 1 bar pentru fiecare poziție de reglare și vana complet deschisă.
BG - m^3/h при пад на налягане от 1 bar за всяка настройка и при напълно отворен вентил.
HR - m^3/h kod pada tlaka od 1 bar, kod svake prednamještene pozicije i potpuno otvorenog ventila.
BiH - m^3/h kod pada tlaka/pritiska od 1 bar, kod svake prednamještene pozicije i potpuno otvorenog ventila.
SR - m^3/h pri padu pritiska od 1 bar za svaku poziciju predpodešavanja i potpuno otvorenom ventilu.
ET - m^3/h rõhu langemisel 1 baari võrra igal sättel ja täielikult avatud ventiilikaanega.
LV - m^3/h pie spiediena zudumiem 1 bar, katram priekšiestatījumam un pilnībā atvērta vārsta.
LT - m^3/h esant slėgio skirtumui 1 bar pilnai atidarytam vožtuvui prie kiekvieno nustatymo.
TR - Vananın tam açık pozisyonunda ve her önayar değeri için, 1 bar basınç düşümü durumundaki debi, m^3/h.
ZH - m^3/h在每个设定值1 bar压力下，且阀芯全开时.
SV - m^3/h vid ett tryckfall av 1 bar vid respektive inställning och fullt öppen ventilkägla.
NO - m^3/h ved et trykkfall på 1 bar ved angitt innstilling og helt åpen ventilkjegle.
FI - Virtaus m^3/h täysin auki olevan venttiilikaran ja kulloisenkin esisäätöarvon muodostaman vastuksen läpi.
DA - m^3/h ved tryktab på 1 bar ved respektiv indstilling og fuldt åben reguleringskegle.

*)

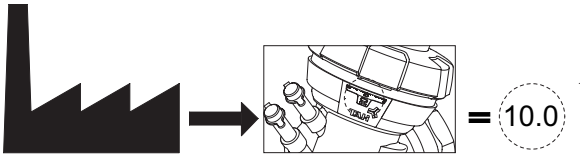

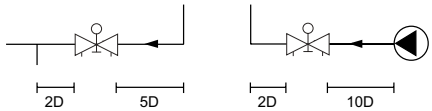

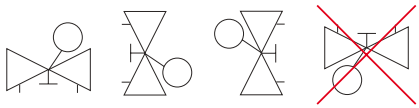

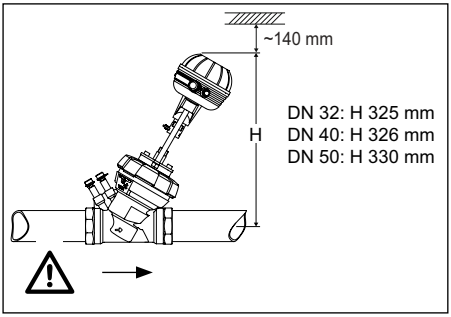

1

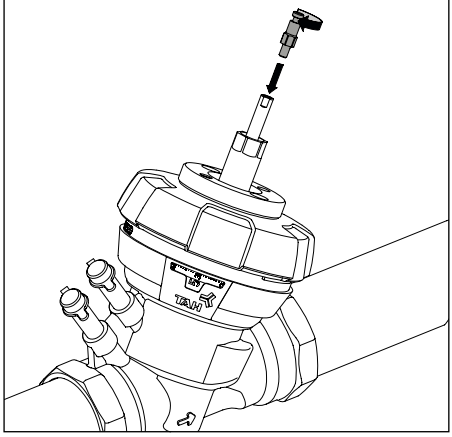

2

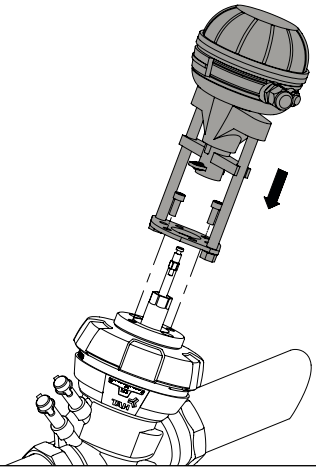

EN Following operations can be made with or without the actuator mounted. Ensure that the actuator is disengaged from the valve spindle during the operations.

DE Folgende Tätigkeiten können mit oder ohne montiertem Stellantrieb durchgeführt werden. Stellen Sie sicher, dass der Stellantrieb während der Tätigkeiten von der Ventilspindel abgekoppelt ist.

FR Les opérations suivantes peuvent être réalisées sans démonter le moteur. S'assurer que le moteur est désaccouplé de la vanne durant les opérations.

NL De volgende handelingen kunnen worden uitgevoerd met of zonder gemonteerde motor. Verzeker u ervan dat de motor is losgekoppeld van de spindel van de afsluiter tijdens de volgende handelingen.

ES Las siguientes operaciones pueden realizarse con el actuador montado o desmontado. Asegúrese de que el actuador está desacoplado del vástago, durante su realización.

PT As seguintes operações podem ser feitas com ou sem o atuador montado. Cerfifique que o atuador está desacoplado do eixo da válvula durante as operações.

IT Le seguenti operazioni possono essere eseguite con o senza l'attuatore montato. Assicurarsi che l'attuatore sia disinserito dal pistone della valvola durante il funzionamento.

RU Операции могут осуществляться как с установленным приводом, так и без него. Убедитесь, что привод отсоединен от штока клапана на время проведения операции.

HU A következő műveletek elvégezhetőek a szelepmozgató fel- és leszerelt állapotában is. Ellenőrizze, hogy a szelepmozgató le legyen választva a szeleporsóról a következő műveltek közben.

PL Powyższe czynności mogą być wykonane z lub bez zamontowanego siłownika. Upewnij się, że siłownik jest zdjęty z trzpienia zaworu podczas wykonywania następujących operacji.

CS Následující činnosti lze provádět s již nainstalovaným pohonem nebo bez něj. Pohon, ale musí být odpojen od dříku ventilu.

SK Nasledujúce činnosti možno vykonávať s už nainštalovaným pohonom alebo bez neho. Pohon, ale musí byť odpojený od drieku ventilu.

SL Sledeče funkcije so možne z nameščenim pogonom ali brez. Prepričajte se, da je pogon ločen od vretena ventila med temi operacijami.

RO Următoarele operațiuni pot fi realizate cu/fără servomotorul montat. Asigurați-vă că servomotorul este deconectat de pe vană și de pe axul vanei în timpul acestor operațiuni.

BG Операционите могат да се извършват с или без инсталирана задвижка. Убедетесе, че задвижката е разединена от шпиндела на вентила.

HR Slijedeće operacije mogu biti napravljene sa ili bez montiranog pogona. Tijekom operacije, osigurati da je pogon ventila odvojen od vretena.

BiH Slijedeće operacije mogu biti napravljene sa ili bez montiranog pogona. Tijekom operacije, osigurati da je pogon ventila odvojen od vretena.

SR Sledeće operacije je moguće izvršiti sa ili bez pogona montiranog na ventilu. Uverite se da je pogon odvojen od vretena ventila za vreme operacija.

ET Nende toimingute teostamiseks peab olema eelnevalt lahti ühendatud mootor ventiili spindlist.

LV Sekojošo darbību var veikt ar vai bez izpildmehānisma montāžas. Nodrošiniet, ka aktuators ir atvienots no vārsta vārpstas šīs darbības laikā.

LT Šiuos veiksmus galima atlikti tiek esant sumontuotoms pavaroms, tiek ir be jų. Patikrinkite, kad eksploatuojant pavara būtų atjungta nuo vožtuvo ašies.

TR Aşağıda tanımlanan uygulamalar aktüatör vanaya montajlı veya montajsız iken gerçekleştirilebilir. Bu uygulamalar sırasında aktüatörün vana miline bağlı olmadığından emin olunuz.

ZH 在有或没有安装执行器的情况下都可进行以下操作。 但是在操作时，必须将执行器脱离阀轴。

SV Följande funktioner kan göras med eller utan monterat ställdon. Säkerställ att ställdonet är borkopplat från ventilspindeln innan injustering, avstängning, mätning eller spolning.

NO Følgende operasjoner kan gjøres med eller uten aktuator montert. Sørg for at aktuatoren er koblet fra ventilspindelen under operasjonene.

FI Seuraavat toimenpiteet voidaan tehdä ilman toimilaitetta tai kun se on kiinnitetty. Varmista että toimilaite on irrotettu venttiilin karasta seuraavien toimenpiteiden aikana.

DA Følgende operationer kan foretages med eller uden aktuator monteret. Spindelen skal dog altid være frigjort under disse operationer.

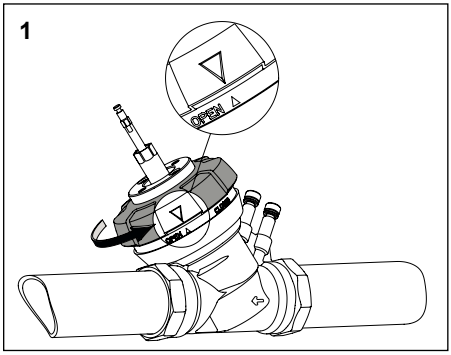
1
OPEN
CLOSE

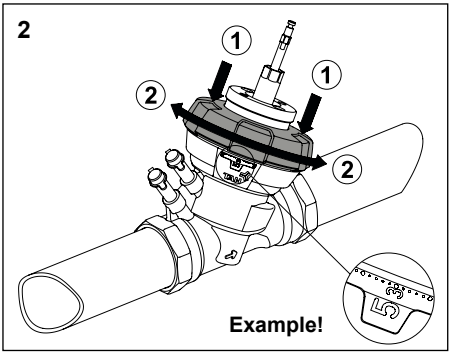
2
1
1
2
2
UNLOCK
Example!

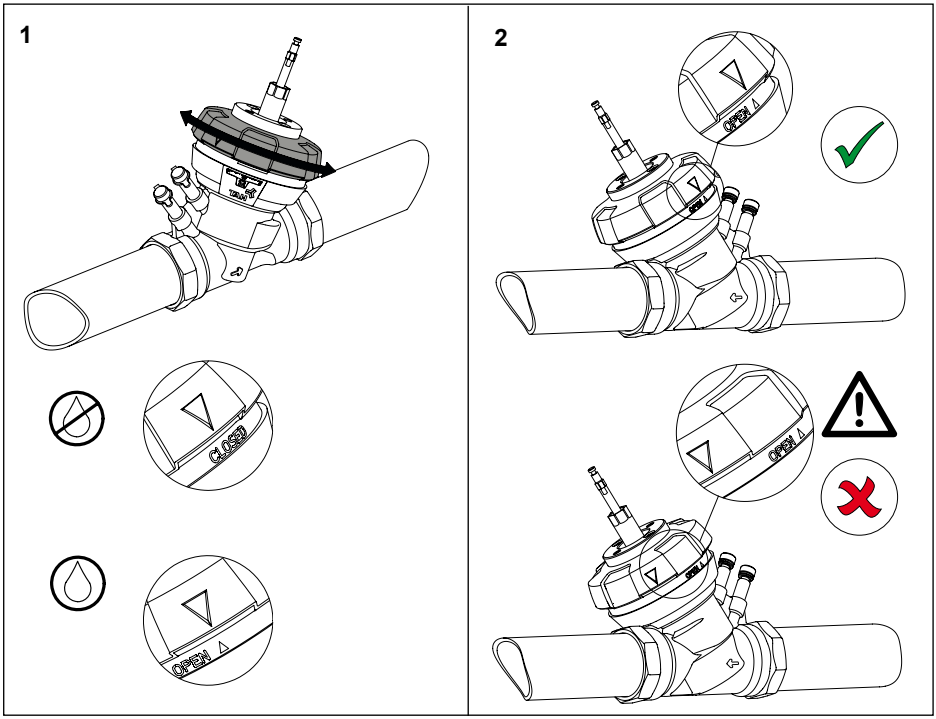
1
UNLOCK
CLOSED
OPEN
2
OPEN
OPEN

q
ΔpV

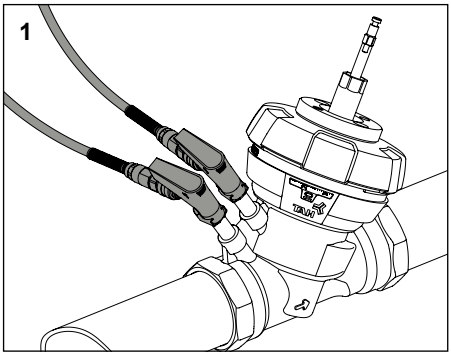

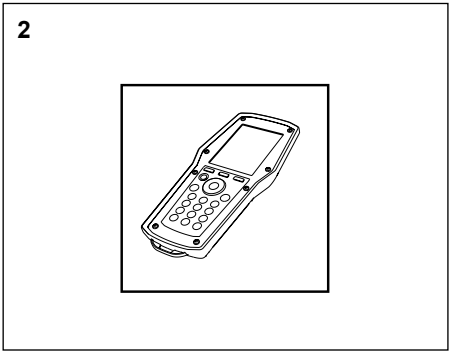

ΔH

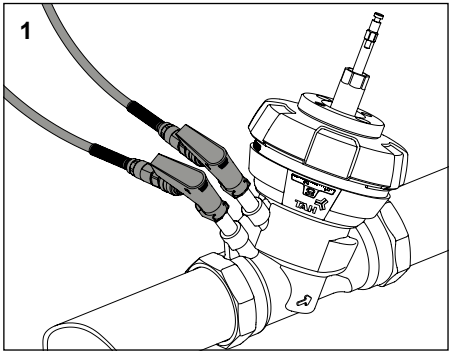

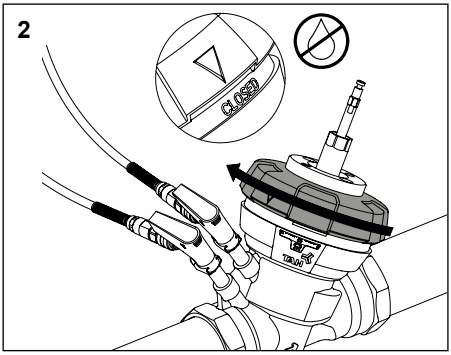

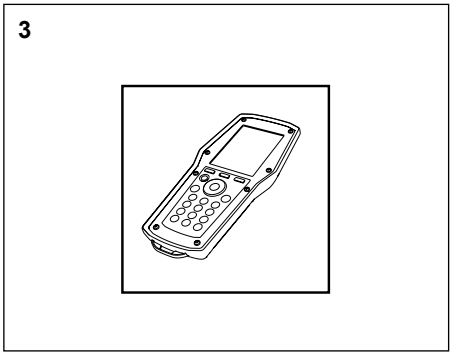

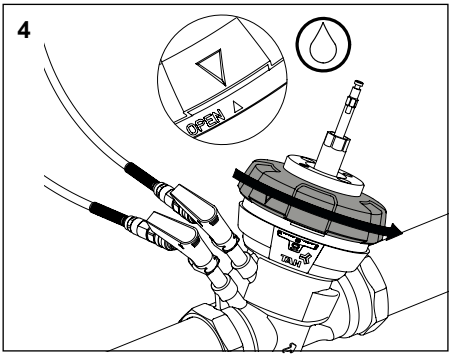

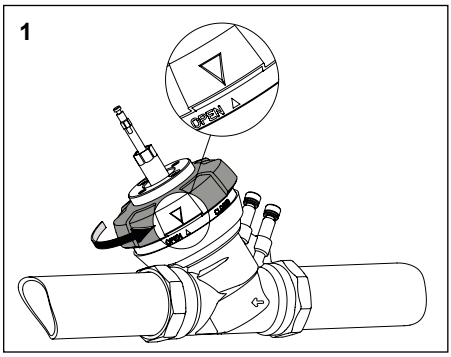
1
OPEN
OPEN
CLOSE

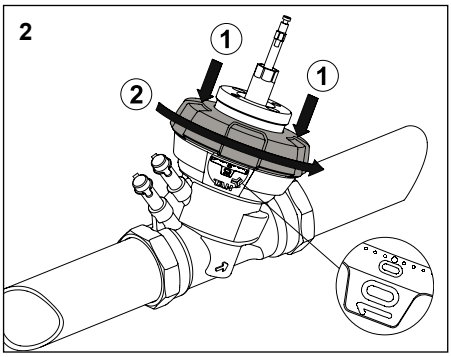
2
1
1
2

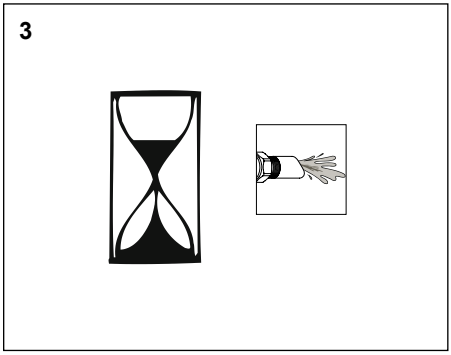
3

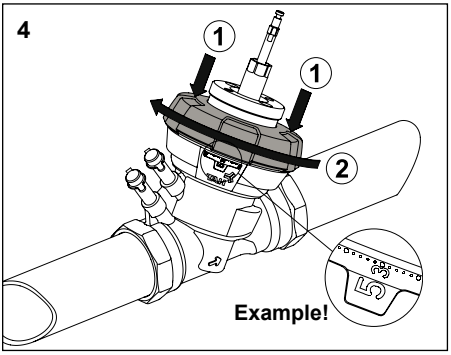
4
1
1
2
Example!

We reserve the right to introduce technical alterations without previous notice.

IMI
Hydronic Engineering

www.imi-hydronic.com

4000015.01
09.2014

IMI TA

TA-FUS1ON-C (DN 65-80)

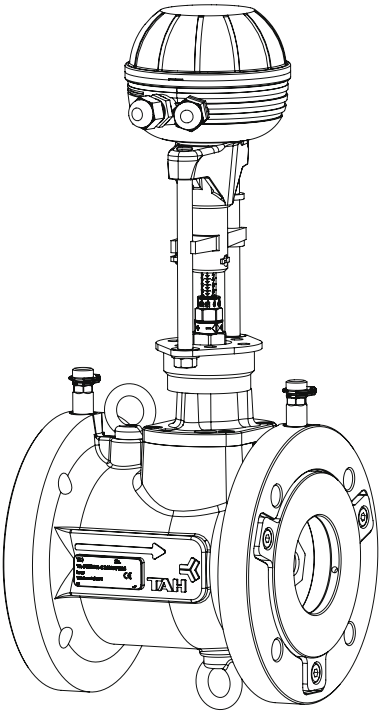

IMI Hydronic Engineering

Pos	Kv_{max} DN 65	DN 80
5.5	12.6	19.8
6	14.9	23.2
6.5	17.6	27.4
7	20.6	32.2
7.5	24.3	38.1
8	28.8	45.2
8.5	34.5	54.5
9	41.8	65.9
9.5	51.4	81.2
10*	64.3	100

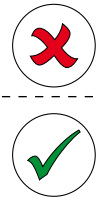

Pos 7.5–10
(≈40–100% of Kvs)

-20°C – +120°C

PN 16 / PN 25

Max. ΔpV = 400 kPa = 4.0 bar

Kv_{max} =

EN - m^3/h at a pressure drop of 1 bar at each setting and fully open valve plug.
DE - m^3/h bei einem Druckverlust von 1 bar bei der jeweiligen Einstellung und voll geöffnetem Regelkegel.
FR - m^3/h pour une pression différentielle de 1 bar, pour chaque réglage et vanne complètement ouverte.
NL - m^3/h bij een drukverschil van 1 bar, elke instelstand en volledig geopende afsluiter.
ES - m^3/h con una pérdida de carga de 1 bar, para cada ajuste, estando el obturador en la posición totalmente abierta.
PT - m^3/h a uma queda de pressão de 1 bar para cada ajuste e válvula totalmente aberta.
IT - m^3/h ad un calo di pressione di 1 bar ciascuna impostazione e con apertura totale della valvola.
RU - $м^3/ч$ при перепаде давления в 1 бар для каждой настройки и полностью поднятом штоке клапана.
HU - m^3/h, 1 bar nyomáskülönbség mellett minden előbeállítási értéknél és teljesen nyitott szelepállásnál.
PL - m^3/h przy spadku ciśnienia równym 1 bar dla każdej nastawy przy w pełni otwartym grzybku zaworu.
CS - průtok v m^3/h při tlakové ztrátě zcela otevřeného ventilu 1 bar.
SK - m^3/h pri tlakovej strate 1 bar, danom nastavení a plne otvorenom ventilu.
SL - m^3/h pri padcu tlaka za 1 bar pri vsaki nastavitvi in popolnoma odprtem vretenu.
RO - m^3/h pentru o cădere de presiune de 1 bar pentru fiecare poziție de reglare și vana complet deschisă.
BG - m^3/h при пад на налягане от 1 bar за всяка настройка и при напълно отворен вентил.
HR - m^3/h kod pada tlaka od 1 bar, kod svake prednamještene pozicije i potpuno otvorenog ventila.
BiH - m^3/h kod pada tlaka/pritiska od 1 bar, kod svake prednamještene pozicije i potpuno otvorenog ventila.
SR - m^3/h pri padu pritiska od 1 bar za svaku poziciju predpodešavanja i potpuno otvorenom ventilu.
ET - m^3/h rõhu langemisel 1 baari võrra igal sättel ja täielikult avatud ventiilikaanega.
LV - m^3/h pie spiediena zudumiem 1 bar, katram priekšiestatījumam un pilnībā atvērta vārsta.
LT - m^3/h esant slėgio skirtumui 1 bar pilnai atidarytam vožtuvui prie kiekvieno nustatymo.
TR - Vananın tam açık pozisyonunda ve her önayar değeri için, 1 bar basınç düşümü durumundaki debi, m^3/h.
ZH - m^3/h在每个设定值1 bar压力下，且阀芯全开时.
SV - m^3/h vid ett tryckfall av 1 bar vid respektive inställning och fullt öppen ventilkägla.
NO - m^3/h ved et trykkfall på 1 bar ved angitt innstilling og helt åpen ventilkjegle.
FI - Virtaus m^3/h täysin auki olevan venttiilikaran ja kulloisenkin esisäätöarvon muodostaman vastuksen läpi.
DA - m^3/h ved tryktab på 1 bar ved respektiv indstilling og fuldt åben reguleringskegle.

*)

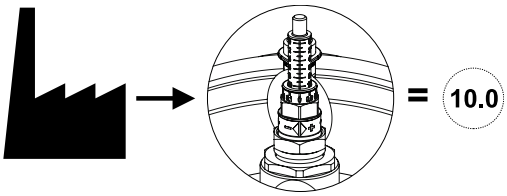

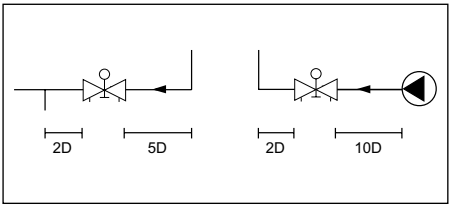

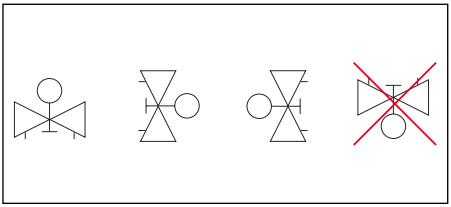

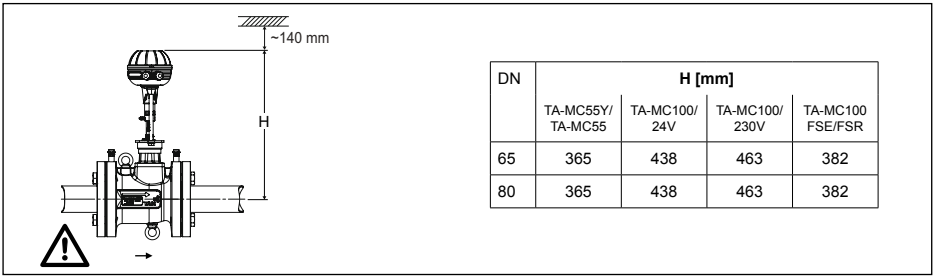

DN	H [mm]			
	TA-MC55Y/ TA-MC55	TA-MC100/ 24V	TA-MC100/ 230V	TA-MC100 FSE/FSR
65	365	438	463	382
80	365	438	463	382

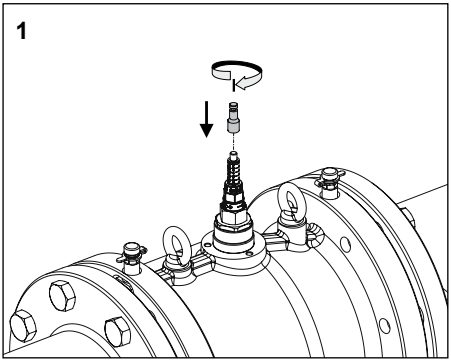

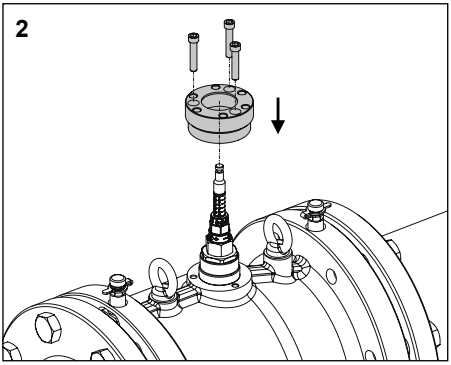

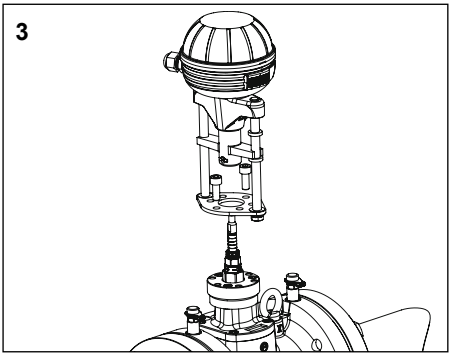

EN Following operations can be made with or without the actuator mounted. Ensure that the actuator is disengaged from the valve spindle during the operations.

DE Folgende Tätigkeiten können mit oder ohne montiertem Stellantrieb durchgeführt werden. Stellen Sie sicher, dass der Stellantrieb während der Tätigkeiten von der Ventilspindel abgekoppelt ist.

FR Les opérations suivantes peuvent être réalisées sans démonter le moteur. S'assurer que le moteur est désaccouplé de la vanne durant les opérations.

NL De volgende handelingen kunnen worden uitgevoerd met of zonder gemonteerde motor. Verzeker u ervan dat de motor is losgekoppeld van de spindel van de afsluiter tijdens de volgende handelingen.

ES Las siguientes operaciones pueden realizarse con el actuador montado o desmontado. Asegúrese de que el actuador está desacoplado del vástago, durante su realización.

PT As seguintes operações podem ser feitas com ou sem o atuador montado. Cerfifique que o atuador está desacoplado do eixo da válvula durante as operações.

IT Le seguenti operazioni possono essere eseguite con o senza l'attuatore montato. Assicurarsi che l'attuatore sia disinserito dal pistone della valvola durante il funzionamento.

RU Операции могут осуществляться как с установленным приводом, так и без него. Убедитесь, что привод отсоединен от штока клапана на время проведения операции.

HU A következő műveletek elvégezhetőek a szelepmozgató fel- és leszerelt állapotában is. Ellenőrizze, hogy a szelepmozgató le legyen választva a szeleporsóról a következő műveltek közben.

PL Powyższe czynności mogą być wykonane z lub bez zamontowanego siłownika. Upewnij się, że siłownik jest zdjęty z trzpienia zaworu podczas wykonywania następujących operacji.

CS Následující činnosti lze provádět s již nainstalovaným pohonem nebo bez něj. Pohon, ale musí být odpojen od dříku ventilu.

SK Nasledujúce činnosti možno vykonávať s už nainštalovaným pohonom alebo bez neho. Pohon, ale musí byť odpojený od drieku ventilu.

SL Sledeče funkcije so možne z nameščenim pogonom ali brez. Prepričajte se, da je pogon ločen od vretena ventila med temi operacijami.

RO Următoarele operațiuni pot fi realizate cu/fără servomotorul montat. Asigurați-vă că servomotorul este deconectat de pe vană și de pe axul vanei în timpul acestor operațiuni.

BG Операционите могат да се извършват с или без инсталирана задвижка. Убедетесе, че задвижката е разединена от шпиндела на вентила.

HR Slijedeće operacije mogu biti napravljene sa ili bez montiranog pogona. Tijekom operacije, osigurati da je pogon ventila odvojen od vretena.

BiH Slijedeće operacije mogu biti napravljene sa ili bez montiranog pogona. Tijekom operacije, osigurati da je pogon ventila odvojen od vretena.

SR Sledeće operacije je moguće izvršiti sa ili bez pogona montiranog na ventilu. Uverite se da je pogon odvojen od vretena ventila za vreme operacija.

ET Nende toimingute teostamiseks peab olema eelnevalt lahti ühendatud mootor ventiili spindlist.

LV Sekojošo darbību var veikt ar vai bez izpildmehānisma montāžas. Nodrošiniet, ka aktuators ir atvienots no vārsta vārpstas šīs darbības laikā.

LT Šiuos veiksmus galima atlikti tiek esant sumontuotoms pavaroms, tiek ir be jų. Patikrinkite, kad eksploatuojant pavara būtų atjungta nuo vožtuvo ašies.

TR Aşağıda tanımlanan uygulamalar aktüatör vanaya montajlı veya montajsız iken gerçekleştirilebilir. Bu uygulamalar sırasında aktüatörün vana miline bağlı olmadığından emin olunuz.

ZH 在有或没有安装执行器的情况下都可进行以下操作。 但是在操作时，必须将执行器脱离阀轴。

SV Följande funktioner kan göras med eller utan monterat ställdon. Säkerställ att ställdonet är borkopplat från ventilspindeln innan injustering, avstängning, mätning eller spolning.

NO Følgende operasjoner kan gjøres med eller uten aktuator montert. Sørg for at aktuatoren er koblet fra ventilspindelen under operasjonene.

FI Seuraavat toimenpiteet voidaan tehdä ilman toimilaitetta tai kun se on kiinnitetty. Varmista että toimilaite on irrotettu venttiilin karasta seuraavien toimenpiteiden aikana.

DA Følgende operationer kan foretages med eller uden aktuator monteret. Spindelen skal dog altid være frigjort under disse operationer.

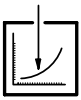

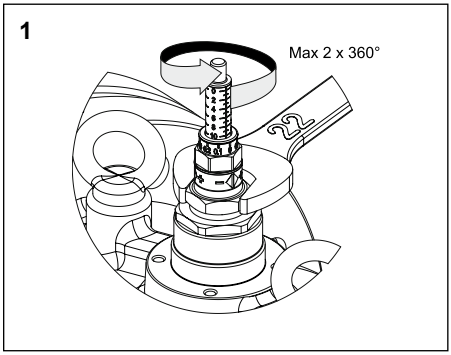
1
Max 2 x 360°

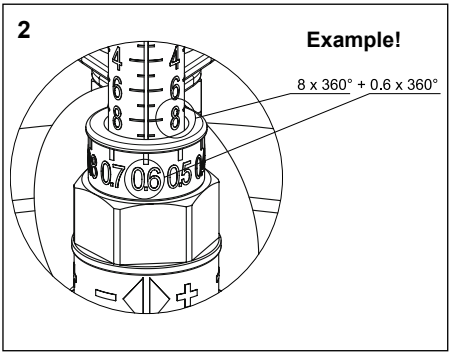
2
Example!
8 x 360° + 0.6 x 360°

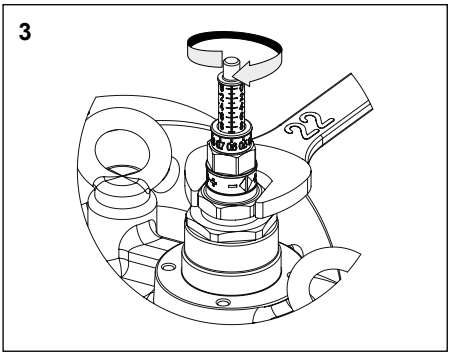
3

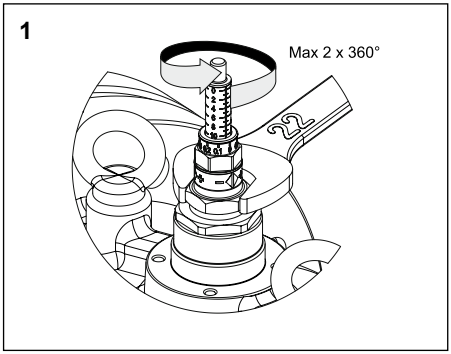

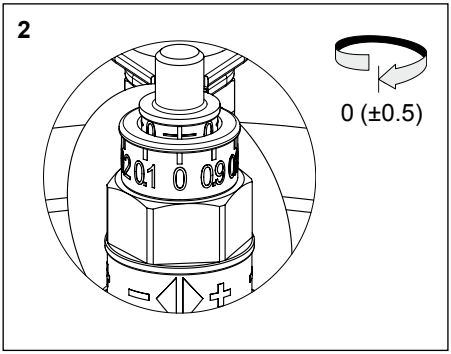

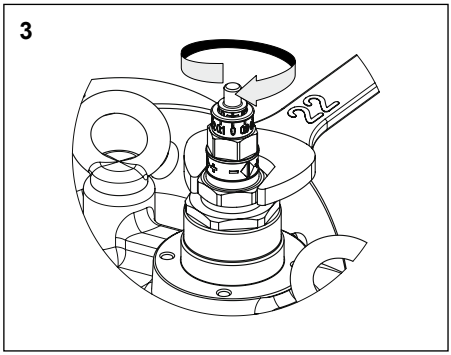

q
ΔpV

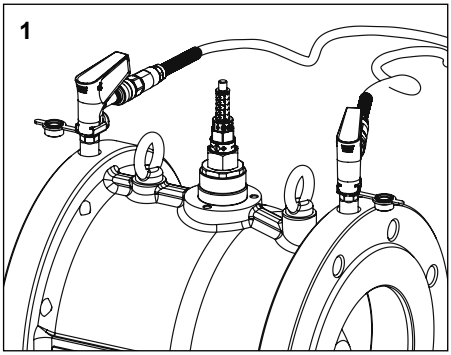

ΔH

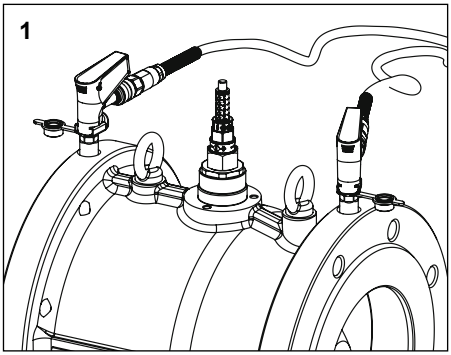

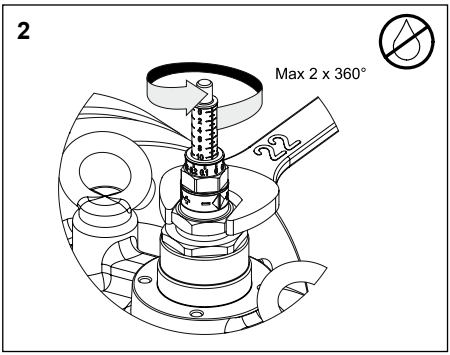

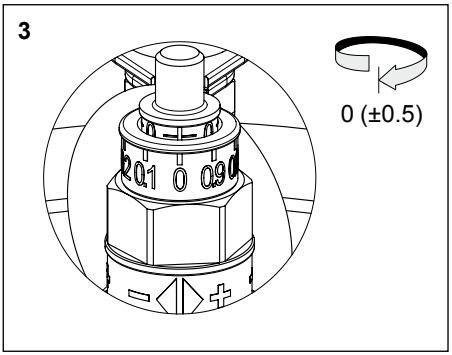

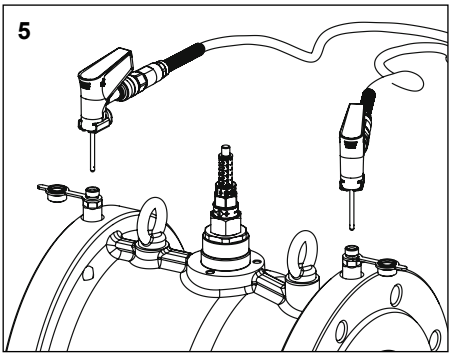

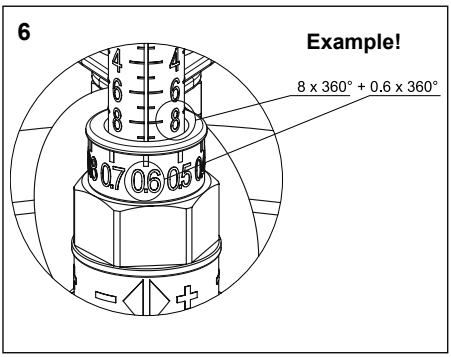

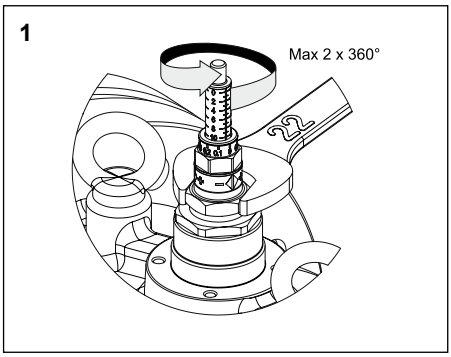

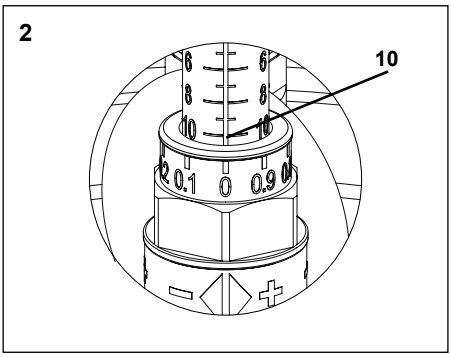

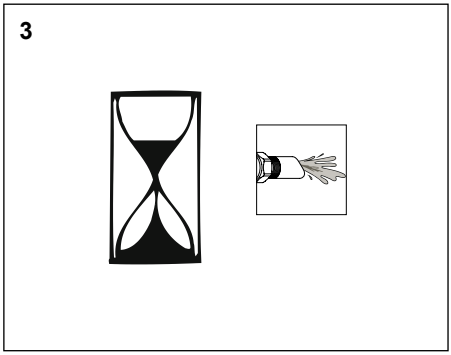

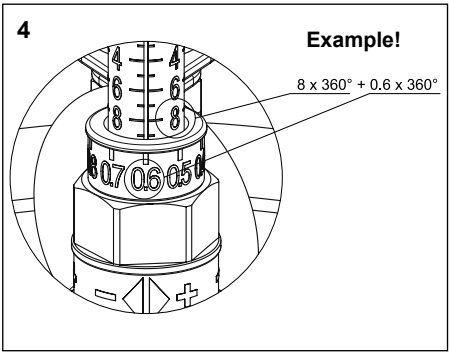

We reserve the right to introduce technical alterations without previous notice.

IMI
Hydronic Engineering

www.imi-hydronic.com

52 762-301
09.2014

IMI TA

TA-FUS1ON-C (DN 100-150)

CE

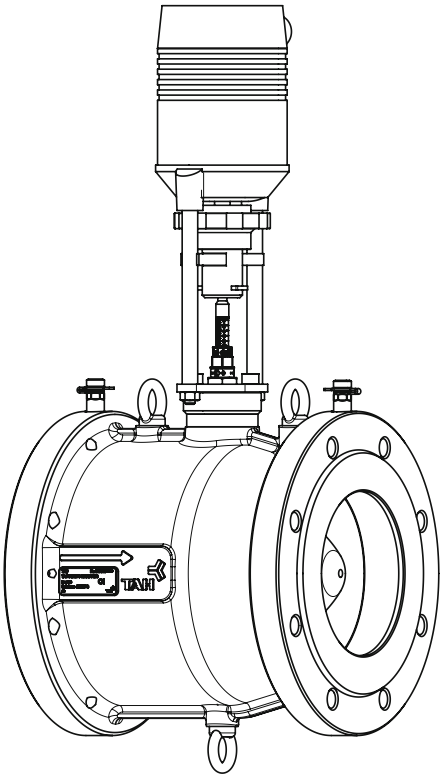

IMI Hydronic Engineering

Pos	Kv_{max} DN 100	DN 125	DN 150
5.5	29.1	49.5	74.5
6	34.5	58.6	88.1
6.5	40.9	69.4	104
7	48.4	82.1	123
7.5	57.4	97.4	146
8	68.6	116	173
8.5	82.6	140	208
9	101	170	253
9.5	125	212	314
10*	160	270	400

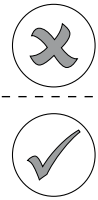

Pos 7.5–10
(≈40–100% of Kvs)

-20°C – +120°C

PN 16 / PN 25

Max. ΔpV = 400 kPa = 4.0 bar

Kv_{max} =

EN - m^3/h at a pressure drop of 1 bar at each setting and fully open valve plug.
DE - m^3/h bei einem Druckverlust von 1 bar bei der jeweiligen Einstellung und voll geöffnetem Regelkegel.
FR - m^3/h pour une pression différentielle de 1 bar, pour chaque réglage et vanne complètement ouverte.
NL - m^3/h bij een drukverschil van 1 bar, elke instelstand en volledig geopende afsluiter.
ES - m^3/h con una pérdida de carga de 1 bar, para cada ajuste, estando el obturador en la posición totalmente abierta.
PT - m^3/h a uma queda de pressão de 1 bar para cada ajuste e válvula totalmente aberta.
IT - m^3/h ad un calo di pressione di 1 bar ciascuna impostazione e con apertura totale della valvola.
RU - $м^3/ч$ при перепаде давления в 1 бар для каждой настройки и полностью поднятом штоке клапана.
HU - m^3/h, 1 bar nyomáskülönbség mellett minden előbeállítási értéknél és teljesen nyitott szelepállásnál.
PL - m^3/h przy spadku ciśnienia równym 1 bar dla każdej nastawy przy w pełni otwartym grzybku zaworu.
CS - průtok v m^3/h při tlakové ztrátě zcela otevřeného ventilu 1 bar.
SK - m^3/h pri tlakovej strate 1 bar, danom nastavení a plne otvorenom ventilu.
SL - m^3/h pri padcu tlaka za 1 bar pri vsaki nastavitvi in popolnoma odprtem vretenu.
RO - m^3/h pentru o cădere de presiune de 1 bar pentru fiecare poziție de reglare și vana complet deschisă.
BG - m^3/h при пад на налягане от 1 bar за всяка настройка и при напълно отворен вентил.
HR - m^3/h kod pada tlaka od 1 bar, kod svake prednamještene pozicije i potpuno otvorenog ventila.
BiH - m^3/h kod pada tlaka/pritiska od 1 bar, kod svake prednamještene pozicije i potpuno otvorenog ventila.
SR - m^3/h pri padu pritiska od 1 bar za svaku poziciju predpodešavanja i potpuno otvorenom ventilu.
ET - m^3/h rõhu langemisel 1 baari võrra igal sättel ja täielikult avatud ventiilikaanega.
LV - m^3/h pie spiediena zudumiem 1 bar, katram priekšiestatījumam un pilnībā atvērta vārsta.
LT - m^3/h esant slėgio skirtumui 1 bar pilnai atidarytam vožtuvui prie kiekvieno nustatymo.
TR - Vananın tam açık pozisyonunda ve her önayar değeri için, 1 bar basınç düşümü durumundaki debi, m^3/h.
ZH - m^3/h在每个设定值1 bar压力下，且阀芯全开时.
SV - m^3/h vid ett tryckfall av 1 bar vid respektive inställning och fullt öppen ventilkägla.
NO - m^3/h ved et trykkfall på 1 bar ved angitt innstilling og helt åpen ventilkjegle.
FI - Virtaus m^3/h täysin auki olevan venttiilikaran ja kulloisenkin esisäätöarvon muodostaman vastuksen läpi.
DA - m^3/h ved tryktab på 1 bar ved respektiv indstilling og fuldt åben reguleringskegle.

*)

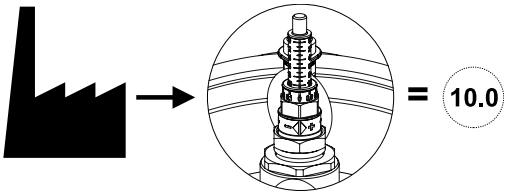

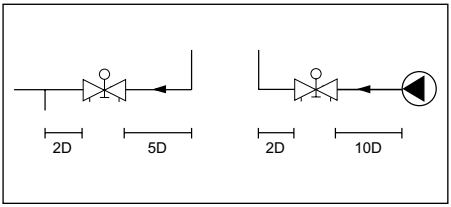

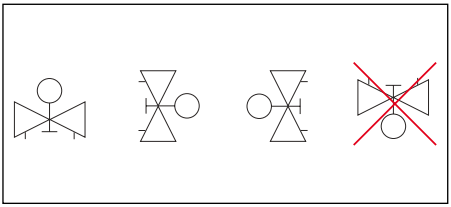

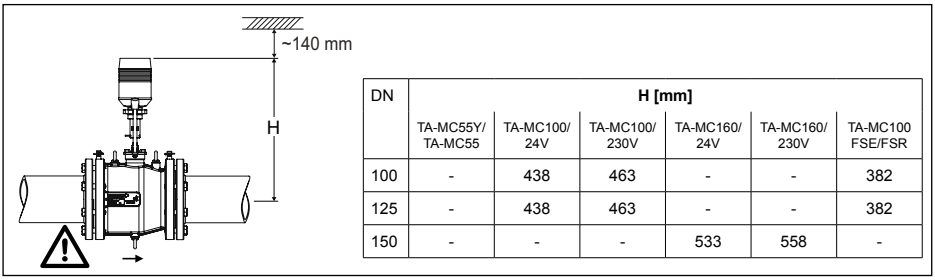

DN	H [mm]					
	TA-MC55Y/ TA-MC55	TA-MC100/ 24V	TA-MC100/ 230V	TA-MC160/ 24V	TA-MC160/ 230V	TA-MC100 FSE/FSR
100	-	438	463	-	-	382
125	-	438	463	-	-	382
150	-	-	-	533	558	-

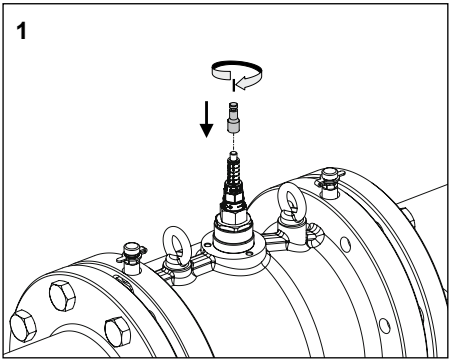

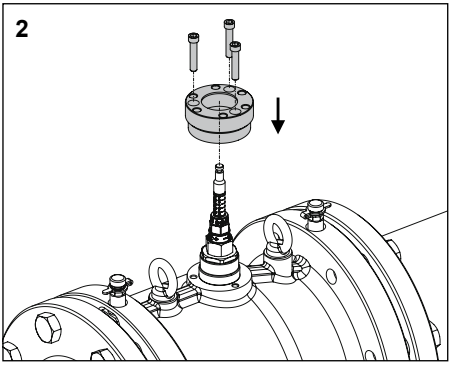

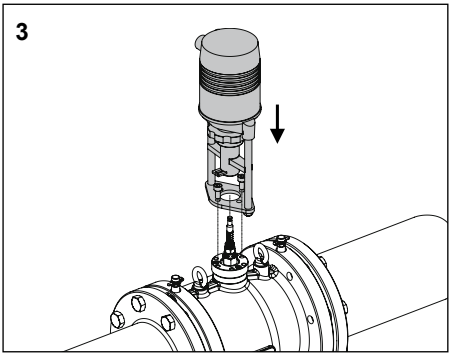

EN Following operations can be made with or without the actuator mounted. Ensure that the actuator is disengaged from the valve spindle during the operations.

DE Folgende Tätigkeiten können mit oder ohne montiertem Stellantrieb durchgeführt werden. Stellen Sie sicher, dass der Stellantrieb während der Tätigkeiten von der Ventilspindel abgekoppelt ist.

FR Les opérations suivantes peuvent être réalisées sans démonter le moteur. S'assurer que le moteur est désaccouplé de la vanne durant les opérations.

NL De volgende handelingen kunnen worden uitgevoerd met of zonder gemonteerde motor. Verzeker u ervan dat de motor is losgekoppeld van de spindel van de afsluiter tijdens de volgende handelingen.

ES Las siguientes operaciones pueden realizarse con el actuador montado o desmontado. Asegúrese de que el actuador está desacoplado del vástago, durante su realización.

PT As seguintes operações podem ser feitas com ou sem o atuador montado. Cerfifique que o atuador está desacoplado do eixo da válvula durante as operações.

IT Le seguenti operazioni possono essere eseguite con o senza l'attuatore montato. Assicurarsi che l'attuatore sia disinserito dal pistone della valvola durante il funzionamento.

RU Операции могут осуществляться как с установленным приводом, так и без него. Убедитесь, что привод отсоединен от штока клапана на время проведения операции.

HU A következő műveletek elvégezhetőek a szelepmozgató fel- és leszerelt állapotában is. Ellenőrizze, hogy a szelepmozgató le legyen választva a szeleporsóról a következő műveltek közben.

PL Powyższe czynności mogą być wykonane z lub bez zamontowanego siłownika. Upewnij się, że siłownik jest zdjęty z trzpienia zaworu podczas wykonywania następujących operacji.

CS Následující činnosti lze provádět s již nainstalovaným pohonem nebo bez něj. Pohon, ale musí být odpojen od dříku ventilu.

SK Nasledujúce činnosti možno vykonávať s už nainštalovaným pohonom alebo bez neho. Pohon, ale musí byť odpojený od drieku ventilu.

SL Sledeče funkcije so možne z nameščenim pogonom ali brez. Prepričajte se, da je pogon ločen od vretena ventila med temi operacijami.

RO Următoarele operațiuni pot fi realizate cu/fără servomotorul montat. Asigurați-vă că servomotorul este deconectat de pe vană și de pe axul vanei în timpul acestor operațiuni.

BG Операционите могат да се извършват с или без инсталирана задвижка. Убедетесе, че задвижката е разединена от шпиндела на вентила.

HR Slijedeće operacije mogu biti napravljene sa ili bez montiranog pogona. Tijekom operacije, osigurati da je pogon ventila odvojen od vretena.

BiH Slijedeće operacije mogu biti napravljene sa ili bez montiranog pogona. Tijekom operacije, osigurati da je pogon ventila odvojen od vretena.

SR Sledeće operacije je moguće izvršiti sa ili bez pogona montiranog na ventilu. Uverite se da je pogon odvojen od vretena ventila za vreme operacija.

ET Nende toimingute teostamiseks peab olema eelnevalt lahti ühendatud mootor ventiili spindlist.

LV Sekojošo darbību var veikt ar vai bez izpildmehānisma montāžas. Nodrošiniet, ka aktuators ir atvienots no vārsta vārpstas šīs darbības laikā.

LT Šiuos veiksmus galima atlikti tiek esant sumontuotoms pavaroms, tiek ir be jų. Patikrinkite, kad eksploatuojant pavara būtų atjungta nuo vožtuvo ašies.

TR Aşağıda tanımlanan uygulamalar aktüatör vanaya montajlı veya montajsız iken gerçekleştirilebilir. Bu uygulamalar sırasında aktüatörün vana miline bağlı olmadığından emin olunuz.

ZH 在有或没有安装执行器的情况下都可进行以下操作。 但是在操作时，必须将执行器脱离阀轴。

SV Följande funktioner kan göras med eller utan monterat ställdon. Säkerställ att ställdonet är borkopplat från ventilspindeln innan injustering, avstängning, mätning eller spolning.

NO Følgende operasjoner kan gjøres med eller uten aktuator montert. Sørg for at aktuatoren er koblet fra ventilspindelen under operasjonene.

FI Seuraavat toimenpiteet voidaan tehdä ilman toimilaitetta tai kun se on kiinnitetty. Varmista että toimilaite on irrotettu venttiilin karasta seuraavien toimenpiteiden aikana.

DA Følgende operationer kan foretages med eller uden aktuator monteret. Spindelen skal dog altid være frigjort under disse operationer.

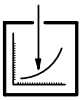

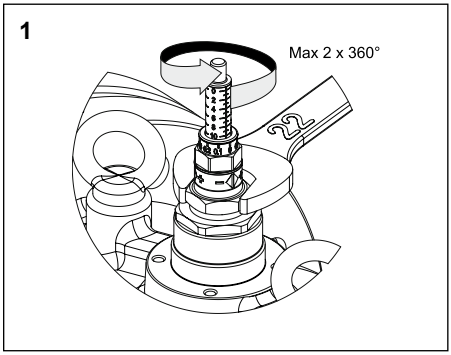
1
Max 2 x 360°

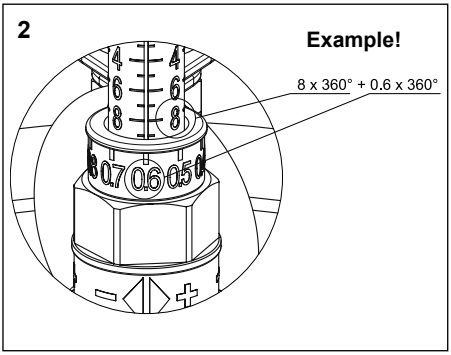
2
Example!
8 x 360° + 0.6 x 360°

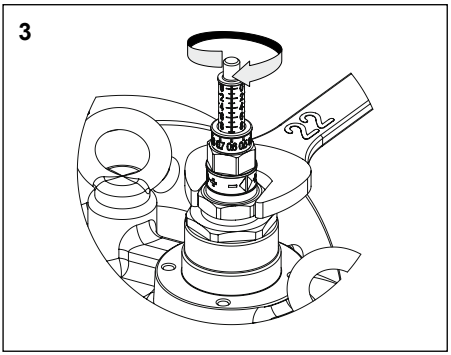
3

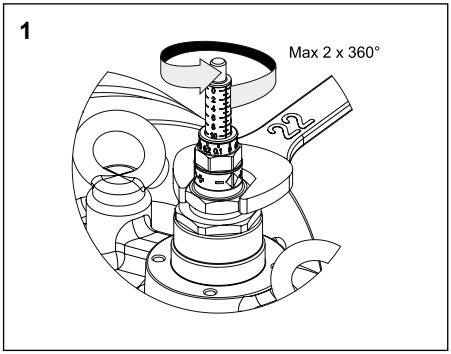

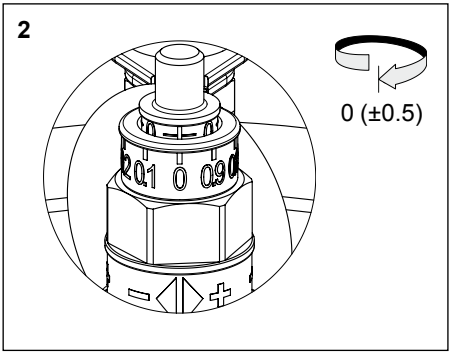

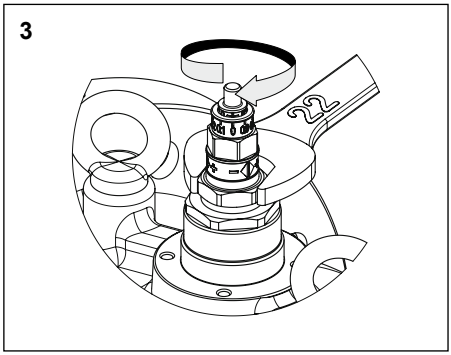

q
ΔpV

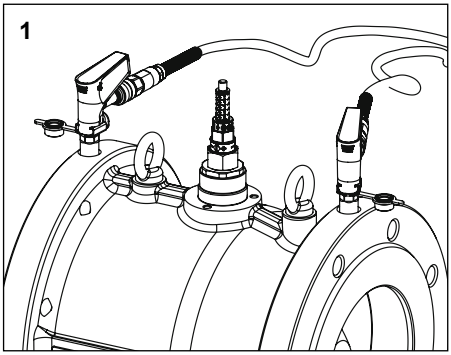

ΔH

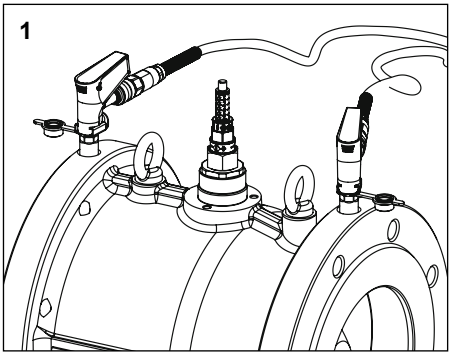

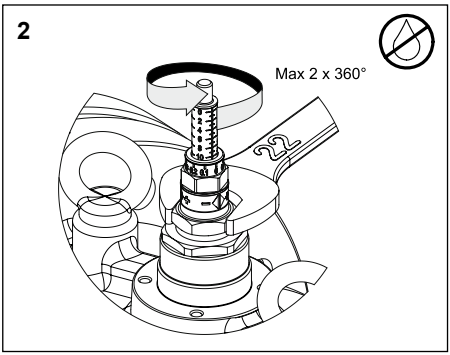

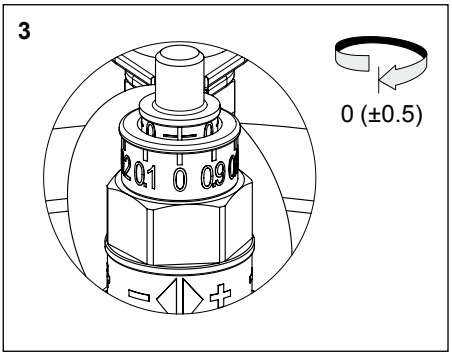

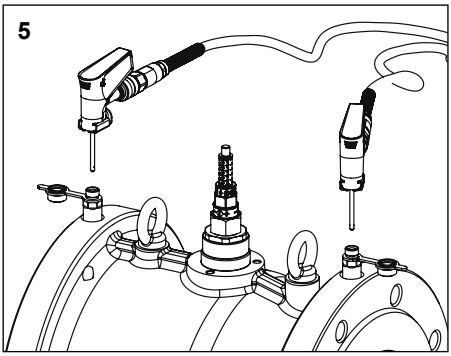

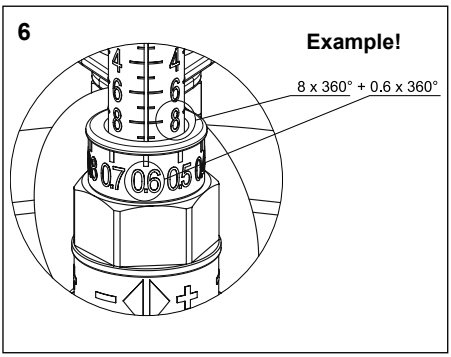

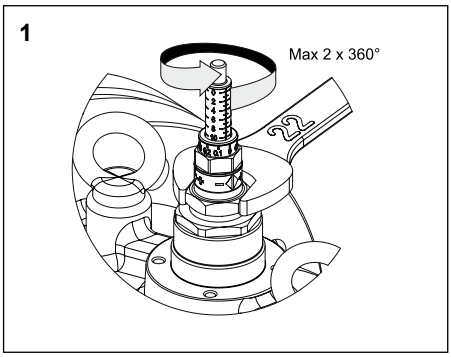

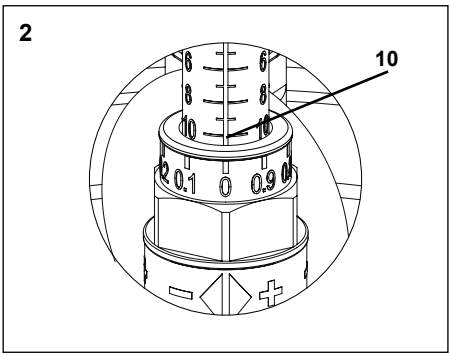

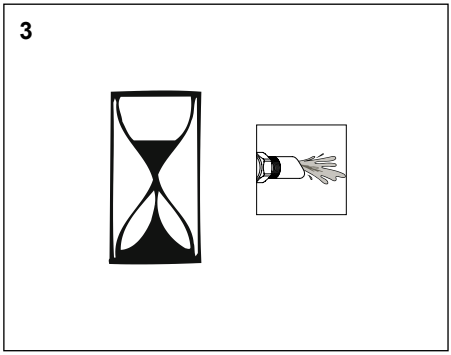

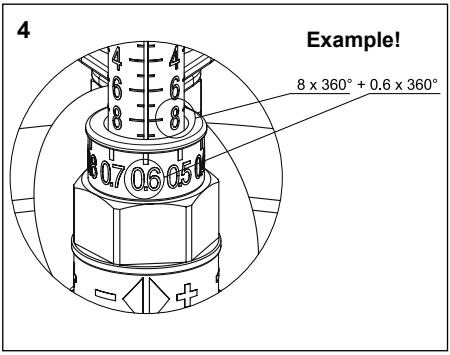

We reserve the right to introduce technical alterations without previous notice.

IMI
Hydronic Engineering

www.imi-hydronic.com