KTH 512

Pressure independent balancing and control valve – Linear

TA

Pressurisation & Water Quality › Balancing & Control › Thermostatic Control

ENGINEERING ADVANTAGE

High-performing and compact, these pressure-independent control valves for variable flow heating and cooling systems are particularly effective in situations requiring high temperatures and/or pressure drop. Also suitable for use on the secondary side in district heating and comfort cooling systems. Rust protection is assured thanks to the electrophoretically painted ductile iron body.

› Inline design
Inline flow allows high pressure drops without noise.

› Adjustable flow
Ensures the design flow.

› Adapters
For use with most available actuators.

› Technical description

Application:
District heating and cooling systems with variable flow.

Functions:
Differential pressure control over the built-in control valve and flow limitation.
Linear characteristics.

Dimensions:
DN 15-50

Pressure class:
PN 25

Max. differential pressure (ΔpV):
1600 kPa = 16 bar

Pressure drop in the throttle (Fc):
12, 20 and 40 kPa.

Temperature:
Max. working temperature: 140°C
Min. working temperature: -10°C

Media:
Water or neutral fluids, water-glycol mixtures.

Material:
Valve body: Ductile iron EN-GJS-400-18LT
Diaphragms and gaskets: EPDM
Valve plug: EPDM/Stainless steel.

Surface treatment:
Electrophoretic painting.

Marking:
TA, DN, PN, Fc, Kvs, GGG-40.3 and flow direction arrow.

Actuators:
KTH 512 can be equipped with adapters for the most common actuators.
The max. lift of the actuator must be checked.

Max. lift of the control valve:
10 mm

Operating function

The throttle (2) for flow adjustment, valve for temperature regulation (9) and flow controller (6) are built in series in one valve body (7). Pressure upstreams of the throttle acts through an internal capillary pipe (V+) to one side of the diaphragm (8) in the flow regulator.
Pressure downstream of the temperature control valve (9) acts to the other side of the diaphragm together with a spring force. Pressure drop in the temperature control valve does not exceed 12, 20 or 40 kPa. The accuracy of flow regulation is practically independent on the pressures upstream and downstream of the controller. As the temperature control valve is pressure relieved, no additional differential pressure controller is needed and it is possible to use actuators with low force.

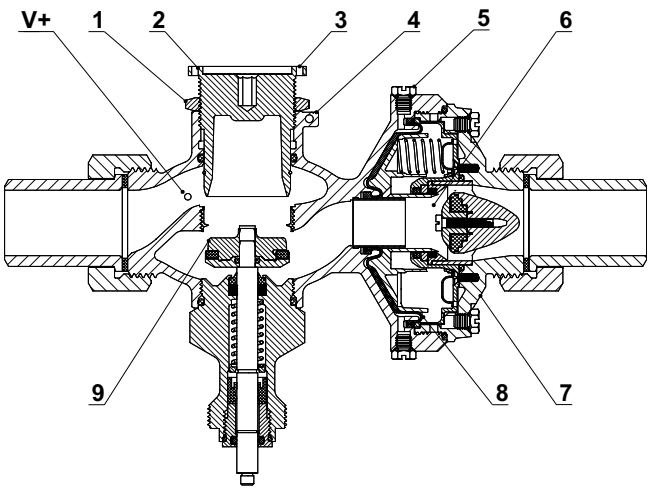

1. Fixing nut
2. Throttle
3. Holes for plombing (throttle)
4. Holes for plombing (valve body)
5. Venting screws
6. Flow controller
7. Valve body
8. Diaphragm
9. Control valve

Sizing

1. Select the smallest size for the flow you need according to q_{max} in the product tables.
2. Check that the available Δp is lager than the sum of the pressure drops calculated according to the formula:

$$\Delta p_{min} = Fc + \left(0.01 \frac{q}{Kvd}\right)^2 \qquad [l/h, kPa]$$

Installation

Flow direction is shown by the arrow on the valve body. Install the valve so that venting is possible and the flow adjustment scale is visible. Check allowed positions of the actuator. Installation of a strainer upstream of the valve is recommended. When filling, vent the body by using the venting screws.
Instead of the plug R1/4 you can install drain valve or measurement nipple for pressure or temperature measurement.

Normal pipe fittings
Try to avoid mounting taps and pumps immediately before the valve.

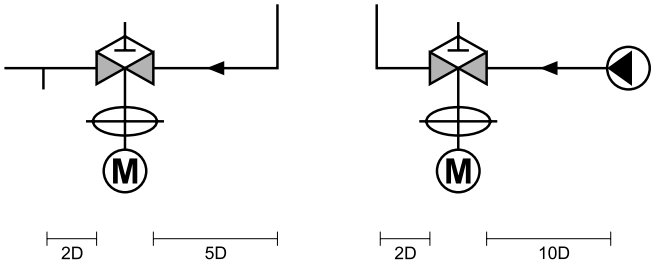

Application example

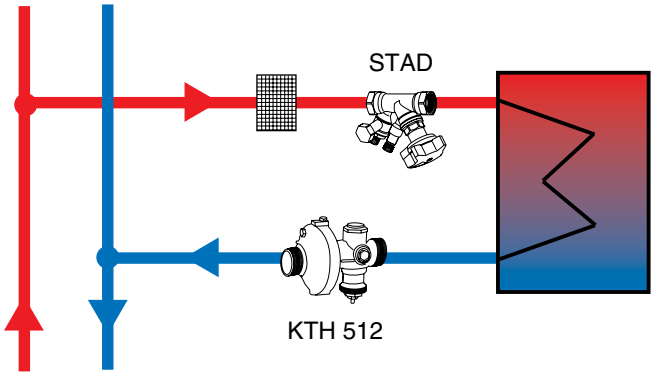

Setting

Presetting of the maximum flow
Release the fixing nut (1). Turn the flow setting screw (2) clockwise to position of 0,0 turns. Turn the flow setting screw anticlockwise the corresponding number of turns according to flow chart. Tighten the fixing nut. The flow setting can be plomed by using holes (3a and 3b) on flow setting screw and the valve body.

a Measure the flow on the balancing valve STAD using the balancing instrument TA-SCOPE or measuring instrument TA-CMI.
b Adjust the throttle until you measure the required flow on the TA-SCOPE or TA-CMI.
c Lock the fixing nut. When you lock the nut please hold the throttle in place with an allen key.
Alternative:
a Take the presetting value from the table which is packed with the valve.
b Open the throttle anti-clockwise. The preset value (e.g. 3,4) means that you open the valve three complete turns. After that turn until the figure 4 fits the red mark on the valve body.
c Lock the fixing nut. When you lock the nut hold the throttle in place with an allen key.

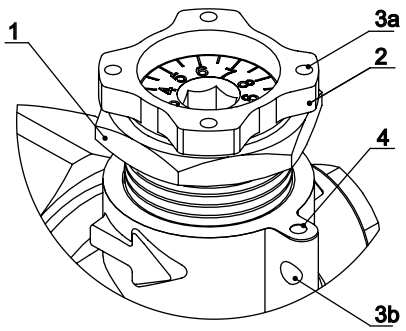

Table - Example:
Valid table is delivered with each valve.

	Position - Einstellung				
	0,0	1,0	2,0	3,0	4,0
,0	57	198	435	656	804
,1	71	222	457	671	815
,2	85	245	479	686	825
,3	99	269	501	700	836
,4	113	293	523	715	846
,5	128	317	546	730	857
,6	142	340	568	745	867
,7	156	364	590	760	878
,8	170	388	612	774	888
,9	184	411	634	789	899
	Flow - Volumenstrom (l/h)				

p_1=4bar p_2=3bar Δp=1bar
Δp < >> 1 bar $\Delta \Rightarrow$ Flow = ≈

Articles

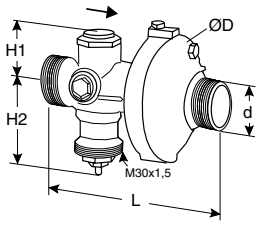

Article No	EAN	DN	d	D	L	H1	H2	Kvd	q_{max} [m³/h]	Kg
Fc = 12 kPa										
52 755-120	7318793866004	15/20	R1	78	110	45	98	4,1	0,9	1,5
52 755-125		25/32	R1 1/4	97	150	53	94	16	3,8	2,0
52 755-140		40/50	R2	125	190	66	94	35	7	4,5
Fc = 20 kPa										
52 755-020	7318793541901	15/20	R1	78	110	45	98	4,1	1,1	1,5
52 755-025		25/32	R1 1/4	97	150	53	94	16	4,4	2,0
52 755-040	7318793865908	40/50	R2	125	190	66	94	35	10	4,5
Fc = 40 kPa										
52 755-220		15/20	R1	78	110	45	98	4,1	1,5	1,5
52 755-225		25/32	R1 1/4	97	150	53	94	16	6,2	2,0
52 755-240		40/50	R2	125	190	66	94	35	13	4,5

→ = Flow direction
Kvd = Is the Kv value of the differential pressure control component when fully open, used to calculate the minimum pressure drop necessary for the valve to operate according to the formula found under “Sizing”.

Adapters for actuators

Article No	EAN	For actuator
52 757-001	7318793848901	Siemens SQS
52 757-002	7318793849007	Johnson Control V7420
52 757-003	7318793849106	Sauter AVM, AVF, SR25, L4
52 757-004	7318793849205	TAC Forta
52 757-005	7318793849304	Hora Mc55
52 757-006	7318793849403	Heimeier EMO-3
52 757-007	7318793849502	Lineg
52 757-008	7318793849601	Danfoss AMV
52 757-009	7318793849700	Belimo NRDVX
52 757-010	7318793849809	Honeywell ML
52 757-011	7318793849908	Samson 5825
52 757-012		Siemens SQX

Connections

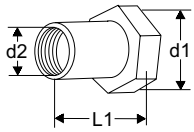

With female thread
Threads according to ISO 228

Article No	EAN	d1	d2	L1*
52 759-015	7318793546609	G1	G1/2	26
52 759-020	7318793546708	G1	G3/4	32
52 759-025	7318793546807	G1 1/4	G1	47
52 759-032	7318793546906	G1 1/4	G1 1/4	52
52 759-040	7318793547002	G2	G1 1/2	52
52 759-050	7318793547101	G2	G2	64,5

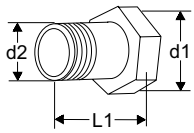

With male thread
Threads according to ISO 7

Article No	EAN	d1	d2	L1*
52 759-115		G1	R1/2	34
52 759-120		G1	R3/4	40
52 759-125		G1 1/4	R1	40
52 759-132		G1 1/4	R1 1/4	45
52 759-140		G2	R1 1/2	45
52 759-150		G2	R2	50

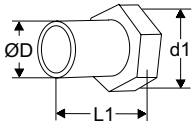

For welding

Article No	EAN	d1	D	L1*
52 759-315	7318793547200	G1	20,8	37
52 759-320	7318793547309	G1	26,3	42
52 759-325	7318793547408	G1 1/4	33,2	47
52 759-332	7318793547507	G1 1/4	40,9	47
52 759-340	7318793547606	G2	48,0	47
52 759-350	7318793547705	G2	60,0	52

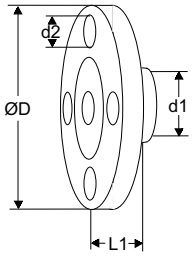

With flange
Flange according to EN-1092-2:1997, type 16.

Article No	EAN	d1	d2	D	L1*
52 759-515	7318793547804	G1	M12	95	10
52 759-520	7318793547903	G1	M12	105	20
52 759-525	7318793548009	G1 1/4	M12	115	5
52 759-532	7318793548108	G1 1/4	M16	140	15
52 759-540	7318793548207	G2	M16	150	5
52 759-550	7318793548306	G2	M16	165	20

*) Fitting length (from the gasket surface to the end of the connection).

Accessories

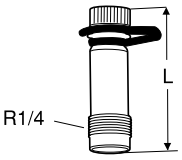

Measuring point
Max 120°C (Intermittent 150°C)

Article No	EAN	L
52 179-009	7318792813108	39
52 179-609	7318792814600	103

The products, texts, photographs, graphics and diagrams in this document may be subject to alteration by TA Hydronics without prior notice or reasons being given.
For the most up to date information about our products and specifications, please visit www.tahydronics.com.

6-10-25 KTH 512 03.2011